Halogen MP5A Analyzer & Display

Operation & Maintenance Guide

Released: 2024-06-12

Halogen Systems, Inc.
8985 Double Diamond Pkwy
Suite B10
Reno, NV 89521
Phone: +1 (775) 832-0495
www.halogensys.com
info@halogensys.com

GETTING TECHNICAL ASSISTANCE

To get assistance for product installation or commissioning, contact Halogen technical support at tech@halogensys.com.

Table of Contents

1. Quick Start Flow Cell and CN01 Installation 3
2. Technical Information 4
3. General Information 4
4. Installation 6
5. Operation 9
5.1. Calibration 10
5.2. Restore Default Calibrations 12
5.3. Key Code 14
5.4. pH Calibration 14
6. Configuration Options 15
6.1. Display Options 15
6.2. Output Configuration 15
6.3. Chlorine set up 4-20 mA 15
7. Maintenance 20
7.1. Wastewater Maintenance 20
7.2. Sensor Cleaning 20
7.3. Flow Cell Maintenance 20
7.4. Annual Maintenance 20
8. Section 6 Troubleshooting 23
9. Section Replacement Parts and Accessories 26
10. Models and Options 27
11. Appendix- Advanced Functions 29
11.1. Long Menu Options 29
11.2. 4-20 mA Calibration 30
11.3. Calibration of Sensor Using pH Buffers 31
11.4. Temperature CALIBRATION- 32
11.5. Changing Modbus Options 32
11.8. Calibrate Conductivity 34
12. Menus v300 and higher 37
13. Other Installation Methods 39
14. Other Documents 43
15. Limited Warranty 44
16. DECLARATION OF CONFORMITY 45

Copyright © 2023-2024 Halogen Systems, Inc. All rights reserved worldwide.

1. Quick Start Flow Cell and CN01 Installation

Install Sensor and Flow Cell

Install the Sensor flow cell on the wall with Ports vertically oriented.

1. Orient the sensor with the outlet port facing up.
2. Connect the tubing to inlet and outlet sampling supply.
3. Connect the sensor to the center 4 pin connector.

Connect Communication

4. Connect the communication cable to Display using 8 pin connector and a suitable cable.
5. Wire PLC per wiring diagram and communication option purchased (e g 4) 4-20 mA or Modbus RTU.
    a. Note CN-01 has two 4-20 mA outputs and CN-04 has 4 outputs.
    b. CN-01-M is a two-output display with a connector wired for Modbus Communications.

Power and Water

6. Turn on water supply and allow time to purge air from Flow Cell.
7. Plug in Display to power connection using plug. (Conduit may also be used).

Operation

The start-up screen will appear after the first cycle (Figure 7). The display will take one minute to update. The system calibration should be checked at start and commissioning. If air is detected the sensor pump will cycle on and off three times to remove air from the sensor and may delay the first cycle completion by up to 20 seconds.

Start Up Screen

```
CHL   -- -- -- -- --

4-20   1 2 3 4
```

Indicates number of 4-20 mA outputs present. Will be 2 or 4 depending on display model.

Figure 1: Start up screen showing the number of 4-20 mA outputs (4) detected.
This screen will appear for 3 to 5 seconds.

Main Screen

```
CHL   - - -
pH    - - -
ORP   - - -      COND   - - -
ADDR    1 2 5
```

Sensor Modbus address (only shown at start up).

Figure 2: Main Screen: normal display after startup and sensor beginning normal operation.
This screen will appear for 3 to 5 seconds

Main Screen

```
CHL   1. 5 7
pH   7. 4 0
ORP   8 0 3      CND   4 1 3 0
TEMP    2 3
```

Figure 3: Display after start-up and complete sensor cycle of operation.

Check sensor calibration (chlorine and pH) using a known method to determine if the readings are accurate. If either parameter need calibration, see the Calibration Section of the manual.

Configure Outputs

8. If using 4-20 mA outputs
    a. Default settings are:

    Output 1: Chlorine: 0 to 5 ppm
    Output 2: Conductivity or (Optional ORP)
    Output 3: Temperature: 32 to 90°F
    Output 4: pH: 0 to 14

    b. If you need to change these settings to match your PLC, see Configuration Section of the Manual.
9. If using Modbus output
    a. See Modbus Setup document for register map in communication instructions.
    b. Enable Modus from Display (See Modbus Section of Manual).

Copyright © 2023-2024 Halogen Systems, Inc. All rights reserved worldwide.

2. Technical Information

Overall*	
Measurement method	Reagent less amperometric, three electrodes, no membrane or electrolyte
Chlorine measurement range - Limit of detection (LOD) - Limit of quantitation (LOQ)	0 to 20 ppm 30 ppb (0.03 ppm) 40 ppb (0.04 ppm)
Resolution	0.001 ppm (1 ppb)
Chlorine accuracy [1]	±5% of the calibrated value1 (DPD) at any pH between 6.5 and 8.75 ±4% of the calibrated value1 (DPD) at any temperature between 15° and 35°C ±4% of the calibrated value1 (DPD) at any conductivity between 200 and 10,000 µS ±10% underflow changes from 0 to 4 meters/second velocity
Turbidity interference	No effect up to 3000 ppm (Arizona test dust fine, 50-micron size)
Calibration stability	6 months (typ)
Measurement interval	60 seconds
pH range (chlorine)	6.5 to 8.75
Conductivity	50 to 10000 µS
Pressure limit	10 bar (145 psi)
Temperature	1 to 55°C
Sample Compensation	Automatic
Factory calibration	Yes
Power consumption	24VDC ±10% at 50mA, 200 mA startup maximum
Communication	Modbus RTU (RS485) 4 - 20 mA DAC (with display transmitter)
Ambient data*	
Storage temperature	-20 to 60°C (-4 to 140°F)
Operating temperature	1 to 50°C (33 to 122°F)
Maximum flow velocity	0 to 4 meters/sec velocity
Maximum immersion depth/pressure	30' or greater, 145 psi
Cleaning method	Continuous mechanical cleaning, electrochemical cleaning
Cable length	5' standard (up to 100')
Cable connection	M12 4-pin
Certifications	CE-compliant for conducted and radiated emissions: - CISPOR 11 (Class A limits) Limit of detection (LOD) - EMC immunity EN 61326-1 (industrial limits) - NSF61/372 Certified (by ALS Labs)
Sensor dimensions	1.75" x 12" (45 mm x 305 mm)
Weight	400 grams
Warranty	12 months
Electrical Specifications	
Electrical Options	24VDC @ 100 mA 85 to 265 VAC 50/60 Hz (CN01/CN04)
Power Connection	VDC Option: Conduit to terminal connection VAC Option: NEMA 3 Plug (CN01/CN04)
Sensor Connection	M12 4-pin
Terminal Wire Range	12 to 22 AWG
Pollution Degree	IP65

* Subject to change without notice

[1]Calibration at 1.5 ppm @ pH 8.0 and 20°C and 2700µS

Copyright © 2023-2024 Halogen Systems, Inc. All rights reserved worldwide.

3. General Information

Critical Safety Information

NOTICE
The manufacturer is not responsible for any damages due to misapplication or misuse of this product including, without limitation, direct, incidental, and consequential damages, and disclaims such damages to the full extent permitted under applicable law. The user is solely responsible to identify critical application risks and install appropriate mechanisms to protect processes during a possible equipment malfunction.

Please read this entire manual before unpacking, setting up, or operating this equipment. Pay attention to all danger and caution statements. Failure to do so could result in serious injury to the operator or damage to the equipment.

Make sure that the protection provided by this equipment is not impaired. Do not use or install this equipment in any manner other than that specified in this manual.

Use of hazard information

⚠	**DANGER**
Indicates a potentially or imminently hazardous situation which, if not avoided, will result in death or serious injury	
⚠	**WARNING**
Indicates a potentially or imminently hazardous situation which, if not avoided, could result in death or serious injury.	
⚠	**CAUTION**
Indicates a potentially hazardous situation that may result in minor or moderate injury.	

Copyright © 2023-2024 Halogen Systems, Inc. All rights reserved worldwide.

4. Installation

The installation instruction that follows is for the flow cell version of the sensor and the 120VAC Display. Other installation documents can be found in the sections in the Appendix section of the manual (Other Installations).

The Halogen Side Stream Sensor is a compact device that connects to a drinking water source using ¼" ID tubing. It requires very little flow and is unaffected by changes in the flow rate. Keep in mind that long tubing lengths will result is delays of readings. This sensor is designed for connection:

1. Using a Display/Transmitter
2. To a SCADA system using Modbus RTU protocol or 4-20 mA Outputs
3. To a PC with an USB/RS485 adapter

The sensor is installed in a clear acrylic flow cell designed to purge air. The inlet pressure should be limited to 60 PSI. The flow rate can be from 0.1 LPM to 10 LPM.

4.1. Typical Installation

The Sensor is normally connected to a potable water line as shown in Figure 1 below. As noted previously, the pressure reducing valve is needed if supply water line pressure is higher than 60 PSI (4 Bar). The flow cell is equipped ¼: John Guest Push to Connect (PTC) fittings on both the inlet and outlet. A short length of tubing is supplied for each connector.

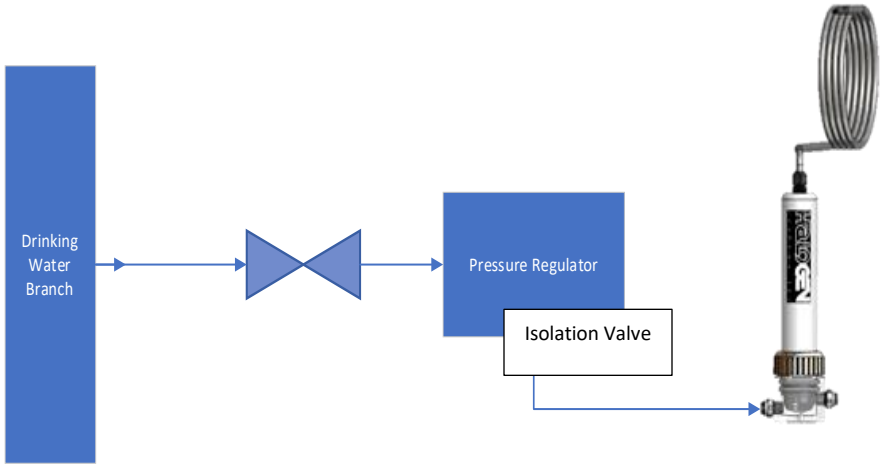

Figure 4: Tubing connection to sensor.

4.1.1 Halogen CN01/CN04 Display Specification

Intended Use: for use with all Halogen Sensors for non-shipboard use.

Voltage	85 to 265 VAC
Frequency	50/60 Hz
Terminal Wire Ranges	12 to 22 AWG
Power/Current	10 Watt
Altitude	0 to 8,000 feet
Relative Humidity	0 to 95% (non-condensing)
Temperature	0 to 50°C
Pollution Degree	IP65
Over Voltage Category	2
Wet location	Yes

Copyright © 2023-2024 Halogen Systems, Inc. All rights reserved worldwide.

4.2. Flow Cell Install

The Sensor is shipped dry. The pH portion of the sensor will wet and stabilize, producing accurate readings within 5 minutes.

Follow the procedure below to prepare the chlorine sensor for operation:

1. Mount the flow cell on a vertical surface.
2. Insert the sensor into the acrylic flow cell with the outlet port of the sensor facing up

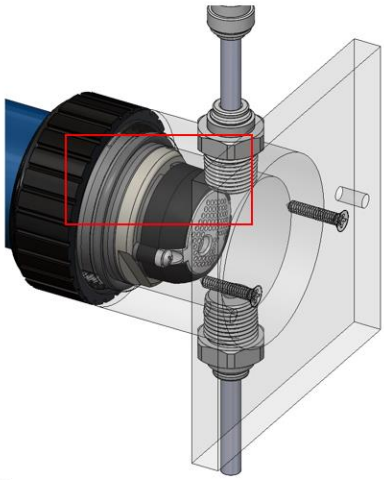

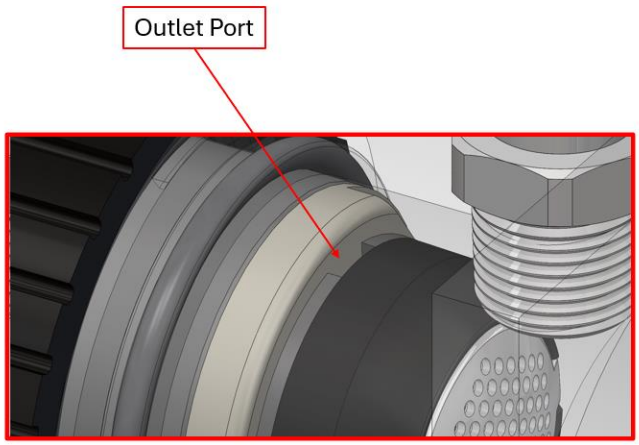

3. Seat the sensor until the flange is flush with the top of the flow cell.
4. Thread the collar down until it stops. Hand tighten only.

4.2.1 Flow Cell Orientation

Note that the orientation of the flow cell is important.

The flow cell must be installed in a vertical position.

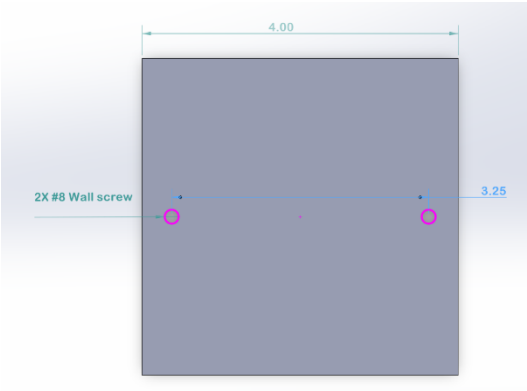

4.3. Halogen CN-04 Display Installation

Intended Use: for use with all Halogen Sensors for non-shipboard use.

Display Mounting

1. Select a mounting location, preferability at eye level for easy visibility of display screen. Display should be no less than 2 feet from the ground.
2. Determine what type of wall display is going to be mounted to, using four (4) #6x1” screws rated for the correct surface.

Sensor Wiring

3. Connect the M12 sensor cable into the center connector as shown below:

Copyright © 2023-2024 Halogen Systems, Inc. All rights reserved worldwide.

Plug the Display into a 120/240 VAC receptacle.

4.3.1 Wiring for the M12-8 connector for the 4-20 mA outputs

4-20mA Output Internal Color Code	PIN Location	Output
Chlorine Positive (+) White	1	1
Chlorine Negative (-) Brown	2	1
PSU Positive (+) or Conductivity* Green	3	2
PSU Negative (-) or Conductivity* Yellow	4	2
Temperature Positive (+) Gray	5	3
Temperature Negative (-) Pink	6	3
pH Positive (+) Blue	7	4
pH Negative (-) Red	8	4

*May be configured for ORP

Figure 5: Pin Out for M12-8 A Code connector for 4-20 mA Outputs.

Note: Output 2 (PSU) is set by default but can be changed from PSU to conductivity or ORP.
A field wire able connector is provided for use with output cable provided by installer.
The pin of the connector to mate with the display is shown about in *Figure 5*.

Copyright © 2023-2024 Halogen Systems, Inc. All rights reserved worldwide.

Display Wiring

Plug the display into a NEMA3R receptacle to power the system.

If the installation requires conduit hard wired connections, the knockouts on the Display enclosure may be removed and replaced with 1/2" (0.875: hole) Liquid Tight connectors and conduit that complies with IP66. If conduit is used on the input power side, a switch must be added to disconnect power from the Display.

Fuse Replacement

There are internal fuses on the CN board inside the enclosure. These are replaceable with components shown below:

Replacement fuses have the following rating:

- 5 X 20 mm, Slow Blow, 3.5 Amp
- Labeled on the printed wiring board F1 and F2

5. Operation

The start-up screen will appear after the first cycle (Figure 7). The display will take one minute to update. The system calibration should be checked at start and commissioning. If air is detected the sensor pump will cycle on and off three times to remove air from the sensor and may delay the first cycle completion by up to 20 seconds.

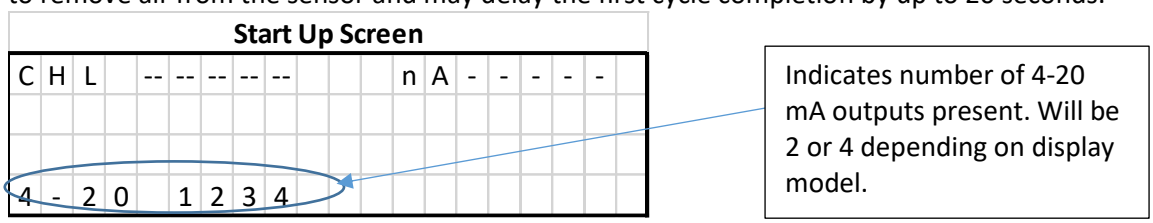

Figure 6: Start up screen showing the number of 4-20 mA outputs (4) detected.
This screen will appear for 3 to 5 seconds.

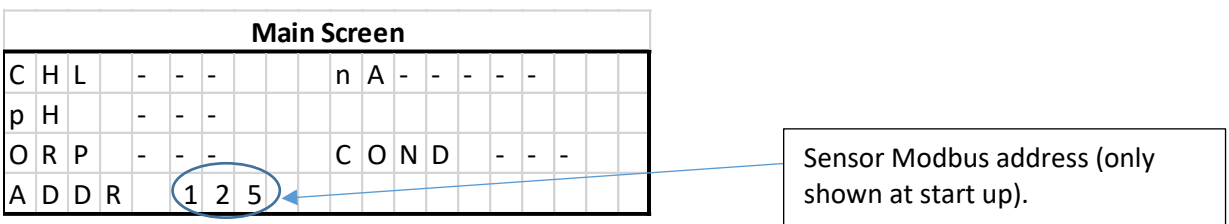

Figure 7: Main Screen: normal display after startup and sensor beginning normal operation.
This screen will appear for 3 to 5 seconds

Display Interface & Keypad Operation

Figure 8: Display & Buttons

Key	Function Description
MENU	Displays the Menu Tree

Copyright © 2023-2024 Halogen Systems, Inc. All rights reserved worldwide.

SELECT	Accepts the value
➔	Move Cursor Right
←	Move Cursor down
↑	Increment a digit or move cursor up
↓	Decrement a digit or mover cursor down
>	Cursor used to select items in a list
_	Cursor for digits- indicates digit that will be edited.
BACK	Moves one level back in Menu

Meaning of Indicators
CHL: This is the level in ppm.
pH: The relative acidity or alkalinity of the water.
ORP: ORP is short for Oxidation Reduction Potential. This is another parameter that indicates the effectiveness of the TRO in killing organisms. It has a logarithmic relationship to TRO and is used for a qualitative comparison only. The reading is a voltage in millivolts.
PSU: (if Set instead of CND) Practical Salinity Unit. Measurement of salinity and refers to the salt concentration in seawater.
Temp: This indicates the temperature in degrees C or F. It will also display below zero values.
CND: Conductivity (default) in µS/cm units. This is a measure of water's ability to pass an electrical current.

5.1. Calibration

Determine the level using a known method. Instructions for a Hach Pocket Colorimeter are included in the Appendix.
We recommend that calibration be checked or completed as follows:

1. Calibration check upon initial installation and normal process conditions.
2. Check calibration at least every six months.
3. If the value deviates by more than 20% then recalibrate the sensor. Since there is some variation in DPD grab sample measurements, we suggest no action unless the deviation is 20% instead of 15% to allow for this added potential error.

The sensor should be calibrated in water with a chlorine level between in a range for your sensor model. This is found in the Specifications Page.

If levels in the water are rapidly changing, it will be impossible to calibrate the sensor in situ. In that case, follow these steps.

1. Remove the sensor and place into a bucket or other container.
2. Pull the grab sample from the bucket.
3. Proceed with the below steps.

5.1.1 Low Level Calibration

There are two Calibration Levels: Low and High. Both are independently set. The first step is to calibrate the high level. If the low level is not accurate then it can be calibrated separately.

1. The high-level chlorine level for calibration must be between 0.75 and 20 ppm.
2. The low-level chlorine level must be between 0.1 and 0.5 ppm.
3. If you perform the low range calibration you should perform a zero-chlorine calibration before performing the low range calibration.

The Sensor will automatically select the low calibration if the known levels are within the range listed in 2 (above). It will select the high range calibration if the levels match those listed in 1 (above). The steps below are for the high range calibration. To calibrate the low range, repeat the steps for the low range.

Copyright © 2023-2024 Halogen Systems, Inc. All rights reserved worldwide.

5.1.2 Chlorine Calibration (Fast)

This method can be used when a stable chlorine value has already been measured.
Determine the chlorine level in Section (below).
Once you have obtained the reading, perform this sequence.

MENU | ↓ Fast CHL Cal | SELECT | Edit digits

Press Select. This will store the sensor value for up to 5 minutes until the DPD level is obtained. (Long Menu selected)	Menu 300 Short > Fast Cal Calibration Configuration
The cursor will appear below the first digit. Use the arrow keys to select and increment the digit to match the reading to the DPD value. Use the ➔button to select which digit to change to match DPD value and the ↑ ↓buttons to change the value, and press **SELECT** to complete.	> Adjust CHL 6.55
This message will appear for a few seconds	Calibrating
This message indicates that the calibration was successful	Success
The CAL indicator will appear in the upper right area of the screen. This indicates that the sensor is updating and will display the new value after it completes the cycle. THE OLD VALUE WILL BE DISPLAYED UNTIL THE NEW CYCLE	CHL 5.113 CAL pH 8.51 ORP 635 CND 305 Temp 18.2
At the end of the cycle, the CAL will disappear and the new value will be displayed.	CHL 6.550 pH 8.51 ORP 635 CND 305 Temp 18.2

Determine the level using a known method. Instructions for a Hach Pocket Colorimeter are included in the Appendix.
We recommend that calibration be checked or completed as follows:

- Calibration check upon initial installation and normal process conditions.
- Check calibration at least every six months.
- If the value deviates by more than 20% then recalibrate the sensor. Since there is some variation in DPD grab sample measurements, we suggest no action unless the deviation is 20% instead of 15% to allow for this added potential error.

5.1.3 Calibrate Chlorine Zero

MENU | Calibrate | CHL Menu |Chl Zero
This is usually unnecessary. If you need to adjust the zero chlorine levels use these steps.
Press SELECT for each Menu Option
The cursor will move to “Done” and the chlorine zero has been set.
Be certain that there is no chlorine residual before performing this operation.

Copyright © 2023-2024 Halogen Systems, Inc. All rights reserved worldwide.

Calibrate

```
  CHLMenu
> pH
  Cal to defaults
```

Calibrate CHL

```
  KNOWN LEVEL
> CHL ZERO
  Fast Chl Cal
```

Calibrate CHL

```
  Is Sensor in zero
  Yes
  No
```

Calibrate CHL

```
  Calibrating
  Est 30 sec Remaing
```

Calibrate CHL

```
  Success
```

Calibrate CHL

```
  Failed
  Make CHL is zero
```

If the sensor detects chlorine, it will not complete the operation. Verify that the chlorine level is zero and try again.
The sensor may trigger an Error 31 alarm when left in deionized water. Complete the zero calibration as normal if this occurs.

5.2. Restore Default Calibrations

If the sensor settings and calibrations have been changed and the sensor is not measuring correctly or has persistent error codes that cannot be resolved, then restoring the default calibrations may resolve the issue. **Note: If you restore calibration to defaults, you will need to re-calibrate the sensor for chlorine.
Follow these steps to restore default calibrations:

MENU | Calibration/Default | Set to Defaults

Copyright © 2023-2024 Halogen Systems, Inc. All rights reserved worldwide.

Calibration defaults

```
> Set to defaults
```

Calibration defaults

```
  Are you sure?
> Yes
  No
```

The sensor will automatically restart to complete the operation.

Calibration defaults

```
  Restarting in 9
```

Figure 19: Restoring default calibration

If Key Code is enabled, when the Calibration Menu is opened, the following screen will appear. You will need to get the Key Code from your supervisor or have a qualified person perform the calibration operation. The Key Code consist of a series of keys pressed in order.

Enter Key Code

```
  CALIBRATE  _ _ _ _
  ENTER KEY  CODE
```

Enter Key Code

```
  CALIBRATE  * _ _ _
  ENTER KEY  CODE
```

Enter Key Code

```
  CALIBRATE  * * _ _
  ENTER KEY  CODE
```

Enter Key Code

```
  CALIBRATE  * * * _
  ENTER KEY  CODE
```

Copyright © 2023-2024 Halogen Systems, Inc. All rights reserved worldwide.

Enter Key Code

```
  C A L I B R A T E   * * * *
  E N T E R   K E Y   C O D E
```

Entering the Key Code will unlock the calibration menu and Sections 6 and 7 can be followed to adjust calibrations.

5.3. Key Code

```
↓
↓
↑
↑
```

5.4. pH Calibration

The MP5 pH sensor uses a no-maintenance solid gel in its pH sensor cartridge. It also uses DryGlass which is stored dry and wets out within 2 minutes after water immersion. The Self-Cleaning function keeps the glass and the porous junction clean. As a result, the calibration is very stable. If calibration is required, the following procedure will adjust the pH reading.

5.4.1 Known Value

To adjust the Known pH value, follow these steps:
Press MENU button, then select CALIBRATE using DOWN arrow, then SELECT

Select pH

```
  C H L
> p H
  C a l i b r a t i o n   d e f a u l t
```

Calibrate pH

```
> S i n g l e   P o i n t   C a l
  E n t e r   M a n u a l   p H
```

Calibrate pH

```
> K n o w n   p H              7 . 6 4
P H Z       0 . 0         - 5 9 . 2
```

Select Known pH and cursor will move to pH, adjust the sensor value to the measured reading.

It will take one cycle to reflect the new calibration.

5.5. Entering a Manual Fixed pH Value

If your pH does not change, you can select a fixed pH that the sensor will use for pH compentation. Enable this in Measurement Options 11.10
The manual level to be used is entered in the pH calibration screen.

Copyright © 2023-2024 Halogen Systems, Inc. All rights reserved worldwide.

Calibrate pH

	S	i	n	g	l	e		P	o	i	n	t		C	a	l		
>	E	n	t	e	r		M	a	n	u	a	l		p	H	8	.	3 0

6. Configuration Options

6.1. Display Options

Configuration

	M	e	a	u	r	e	m	e	n	t		O	p	t	i	o	n	s
>	D	i	s	p	l	a	y		O	p	t	i	o	n	s			
	4	-	2	0	M	A		O	p	t	i	o	n	s				
	M	o	d	b	u	s												

Display Options

D	s	p				X			D	s	p		.	0	1		X
D	s	p				X			K	e	y		C	d	e		-
D	s	p		C	N	D	X			D	e	g		F			X
D	s	p		O	R	P	X			B	a	c	k	L	i	t	e	X

For Power Savings when using battery or solar panels, the Display LCD Backlight can be turned off. It will come on for 10 seconds with any key press.

6.2. Output Configuration

Configuration

	M	e	a	u	r	e	m	e	n	t		O	p	t	i	o	n	s
	D	i	s	p	l	a	y		O	p	t	i	o	n	s			
>	4	-	2	0	M	A		O	p	t	i	o	n	s				
	M	o	d	b	u	s		O	p	t	i	o	n	s				

4-20 mA output channel assignments are as follows:

Output 1: Chlorine: 0 to 10
Output 2: PSU default, assignable to PSU, CND, pH, Temp or ORP
Output 3: Temperature: 32° to 122°F
Output 4: pH: 5 to 12

Usually, an integrator will want to match output settings to the units and scaling used on the PLC. The most common changes will be detailed below. The following example will change the chlorine output from 0 to 10, to 0 to 5 ppm.

NOTE: Halogen 4-20 mA outputs are active and should not be connected to an active loop (externally powered).

6.3. Chlorine set up 4-20 mA

(example change range from 10 to 5 ppm)

Change 4-20 mA Scaling			
Settings	Min (Offset)	Max ppm	Range (span)
Default	0	10	10

Copyright © 2023-2024 Halogen Systems, Inc. All rights reserved worldwide.

Desired	0	5	5

Navigate using this sequence of keypresses:
MENU | 4-20 MA Options | Set 4-20MA Range | 4-20 CHL | SELECT
Move cursor to 10 and change to 5 by changing each digit. Then press SELECT to save the setting.
Complete screen shots are below:

4 - 20 mA Options																		
>	S	E	T		4	-	2	0	M	A		R	A	N	G	E		
	S	e	l	e	c	t		O	u	t	2		T	y	p	e		
	S	e	t		4	-	2	0	M	A		O	f	f	s	e	t	
	D	i	s	p		T	e	m	p		F					N	O	

Set 4-20 mA Range																		
>	4	-	2	0		M	A		C	H	L					1	0	.	0
	4	-	2	0		M	A		P	S	U					5	0	.	0
	4	-	2	0		M	A		T	E	M	P				5	0	.	0
	4	-	2	0		M	A		P	H						1	2	.	0

Set 4-20 mA Range																		
>	4	-	2	0		M	A		C	H	L					0	5	.	0
	4	-	2	0		M	A		P	S	U					5	0	.	0
	4	-	2	0		M	A		T	E	M	P				5	0	.	0
	4	-	2	0		M	A		P	H						1	2	.	0

6.4. pH Output (4 Output Display)

There are two different 4-20 mA Output versions. This instruction is for the 4 Output version. For two Output Versions see 6.6 pH 4-20 mA output can be configured for different output options for pH. The following example will change the output range from pH 5 to pH 12 to pH 0 to pH14: Use and use the keypress string below to get to the menu needed.

MENU | 4-20 MA Options | Set 4-20MA Range | 4-20 PH | DOWN|| DOWN| DOWN | SELECT | RIGHT | SELECT | UP | UP | SELECT

Table 1

Change 4-20 mA Scaling pH			
Settings	Min (Offset)	Max ppm	Range (span)
Default	5	12	7
Desired	0	14	14

First change the Range

Set 4-20 mA Range PH																		
	4	-	2	0		M	A		C	H	L					0	5	.	0
	4	-	2	0		M	A		P	S	U					5	0	.	0
	4	-	2	0		M	A		T	E	M	P				5	0	.	0
>	4	-	2	0		M	A		P	H						1	2	.	0

Set 4-20 mA Range PH																		
	4	-	2	0		M	A		C	H	L					0	5	.	0
	4	-	2	0		M	A		P	S	U					5	0	.	0
	4	-	2	0		M	A		T	E	M	P				5	0	.	0
>	4	-	2	0		M	A		P	H						1	4	.	0

Copyright © 2023-2024 Halogen Systems, Inc. All rights reserved worldwide.

Next change the “Offset” or starting point.
Note: Offset is set to the lower pH limit or starting point. For default it is set to 5 in *Table 1* . in case 2, the Desired will be Offset or starting point will be 0 pH.
MENU | 4-20 MA Options | Set 4-20MA Offset | DOWN| SELECT | 4-20 PH |SELECT | RIGHT | Press DOWN arrow to decrement digit to 0 then press SELECT to accept.

4 - 20 mA Options-Offset
SET 4-20MA RANGE
Select Out 2 Type
> Set 4-20MA Offset
Disp Temp F NO

Set 4-20 mA Offset pH
4-20 MA TEMP 032
> 4-20 MA PH 05.0

Set 4-20 mA Offset pH
4-20 MA TEMP 032
> 4-20 MA PH 00.0

The math to use other ranges is as follows: 4-20 mA Range is set to upper limit minus the Offset. Case 1 will be 12 – 5 = 7. Case 2 will be 14 - 0 = 14

6.5. Temperature Output (Change to °F)

There are three steps to set up the temperature 4-20 mA Output:

Change 4-20 mA Scaling Temp				
Settings	Min (Offset)	Max ppm	Range (span)	Disp Temp
Default °F	32	122	90	YES
Desired °C	0	40	40	NO

Example 1: Set 4-20 mA Span from 32°F to 122°F

1. Select either °C or °F. Default is °C or “NO”
2. The 4-20 mA Output for Temperature can be configured from °C to °F on the 4-20 mA Output. To change the Display units see Measurement Options menu and make this change there. The two settings are independent of each other.

To set Disp Temp to F use this sequence:
MENU | 4-20 MA Options DOWN|| DOWN| DOWN | Disp Temp F SELECT (to change to YES for °F)

Configuration with 4-20 mA Outputs
SET 4-20 RANGE
Select Out 2 Typ
Set 4-20 Offset
> Disp Temp F NO

Copyright © 2023-2024 Halogen Systems, Inc. All rights reserved worldwide.

Configuration with 4-20 mA Outputs

```
  SET 4-20 MA RANGE
  Select Out 2 Typ
  Set 4-20 Offset
> Disp Temp F YES
```

1. Next configure the 4-20 mA Temp output Offset as follows:
    a. OFFSET is the minimum temperature for the 4-20 mA output span
    b. Set OFFSET or minimum temperature of 32°F (default)

Menu sequence will be:
MENU | 4-20 MA Options | Set 4-20MA Offset | DOWN|DOWN |SELECT |SELECT | Press DOWN arrow to decrement each digit to 32 then press SELECT to accept.

Set 4-20 mA Offset (°F = YES)

```
  4-20 MA TEMP 032
  4-20 MA PH   5.0
```

Figure 9: Temperature Offset to °F

1. Set Temperature RANGE(Span) is the span less the OFFSET
    a. Set Range to (122-32 =90) 090

Menu sequence will be:
MENU | 4-20 MA Options | Set 4-20MA Range | DOWN|DOWN |SELECT | Press DOWN arrow to decrement each digit to 90 then press SELECT to accept.

Set 4-20 mA 4 Channel

```
  4-20 MA CHL 10.0
  4-20 MA PSU 50.0
> 4-20 MA TEMP 90.0
  4-20 MA PH   7.0
```

Figure 10:Change temperature range

Example2: Set 4-20 mA Span from 0°C to 40°C

1. Set Disp Temp to C (select Down to No)

Configuration with 4-20 mA Outputs

```
  SET 4-20 MA RANGE
  Select Out 2 Typ
  Set 4-20 Offset
  Disp Temp F NO
```

Figure 11: Set to Output °C

2. Set OFFSET or minimum temperature of 0°C will be OFFSET 00.0

Copyright © 2023-2024 Halogen Systems, Inc. All rights reserved worldwide.

Set 4-20 mA Offset (°F = NO)																	
	4	-	2	0		M	A		T	E	M	P		-	0	0	.	0
	4	-	2	0		M	A		P	H						5	.	0

Figure 12: Temperature Offset to °F

3. Set Range to (40-0 =40) 040

Set 4-20 mA 4 Channel Range																		
	4	-	2	0		M	A		C	H	L				1	0	.	0
	4	-	2	0		M	A		P	S	U				5	0	.	0
>	4	-	2	0		M	A		T	E	M	P			4	0	.	0
	4	-	2	0		M	A		P	H						7	.	0

Figure 13: Set Range for temperature to 40°C

6.6. Two Output Models

In two output models, the 4-20 mA Output 2 can be configured for either PSU, Temperature, Conductivity, pH, or ORP. See screens below for selection. The bottom line of the display indicates which output is selected.

6.6.1 Configure Output 2

Set 4-20 mA Output 2 Channel																		
	S	e	l	e	c	t		P	S	U								
	S	e	l	e	c	t		P	H									
	S	e	l	e	c	t		O	R	P								
>	S	e	l	e	c	t		C	N	D		O	U	T	2	=	C	N	D

Figure 14: Options available for Output 2 Channel

Set 4-20 mA																		
	4	-	2	0		M	A		C	H	L				1	0	.	0
	4	-	2	0		M	A		P	S	U				5	0	.	0
	4	-	2	0		M	A		T	E	M	P			5	0	.	0
	4	-	2	0		M	A		P	H					1	2	.	0
	4	-	2	0		M	A		O	R	P					2	0	0
>	4	-	2	0		M	A		C	O	N	D		6	5	0	0	0

Figure 15: When setting output 2 from PSU to Cond, the label will not change to Cond even the 4-20 will be set for this output. Be sure to adjust the high level to max conductivity level.
<u>Scroll down</u> *to reach the ORP and CND lines. Adjust CND to 65000.*

Set 4-20 mA 4 Channel																		
	4	-	2	0		M	A		O	R	P					2	0	0
>	4	-	2	0		M	A		C	N	D			6	5	0	0	0

If pH Output does not match the Input to the PLC, you may need to Calibrate the 4-20 mA output. See Section in the Appendix to perform this.

Copyright © 2023-2024 Halogen Systems, Inc. All rights reserved worldwide.

7. Maintenance

7.1. Wastewater Maintenance

The Halogen MP5 sensor is very low maintenance and can be installed in either Wastewater or Drinking Water Applications. Since there is no membrane or electrolyte, the maintenance cycle is dramatically longer, and cleaning tasks are usually not needed. The sensor has an integrated cleaning system using polymeric beads the cleans all the electrodes, including the pH sensor cartridge.

In Wastewater applications, some cleaning may be necessary when visible clogging of ports occurs due to biofouling in immersion installations. The electrodes remain clean but the flow into the sensor is restricted due to these clogged or plugged ports.

7.2. Sensor Cleaning

When sensors are installed in applications with high iron concentrations or high biofouling, a buildup can occur on the end of the sensor (strainer) that may restrict flow through the sensor. In these applications, the sensor should be inspected every two weeks. If build up is present, follow one of these two following procedures:

Option 1: Metabisulfite
then the sensor should be immersed for one minute in a solution of Potassium Metabisulfite (LD Carlson 6012A). Follow manufacturers recommendation for solution concentration. The sensor should be operated during the cleaning step, rinsed, powered off, then returned to service.

Option 2: Vinegar
To clean the sensor with vinegar, remove the sensor from process, and rinse to remove any residual chlorine.

1. Select a small container and fill with 2” of tap water and immerse the sensor.
2. Power the sensor on and tap lightly to remove air and rinse the sensor.
3. Remove the sensor from the container.
4. Empty the container then refill with vinegar.
5. Place the sensor in the container, power on and clear air as in step 2.
6. Run the sensor for five to ten minutes, remove the sensor, and rinse as in Step 2. Do not leave the sensor in this solution for more than 10 minutes.
7. Return the sensor to the process and check calibration.

Note: If the sensor is underreporting chlorine measurements after performing either Option 1 or Option 2, please refer to section, “7.4.1 Wear Part Replacement” to recover the sensor.

WARNING: Always wear eye and skin protection when handling. Follow all Material Safety Data Sheet recommendations.

7.3. Flow Cell Maintenance

The maintenance on the flow cell is simple cleaning. The flow cell is clear to make examination of the condition of the sensor easier without interfering with operations. The flow cell may be cleaned by wiping or by washing with detergents or diluted acids. Do not try to clean with solvents as the acrylic may craze or crack. Change the O-ring annually if worn or still. The O-ring can be lubricated with silicone grease.
Replace the tubing at least once a year. Replace brittle, cracked or leaky tubing immediately. Replace old, discolored, fouled or damaged tubing with tubing of the same diameter.

7.4. Annual Maintenance

7.4.1 Wear Part Replacement

This section is dedicated to the vital practice of replacing wear parts in Chlorine Analyzers. Wear parts, such as gaskets, bearings, impellers, and wear rings, undergo natural wear and tear during the operation of these analyzers. By understanding when and

Copyright © 2023-2024 Halogen Systems, Inc. All rights reserved worldwide.

how to replace these components, users can uphold the accuracy of their measurements, prolong the sensor's service life, and ensure the efficiency of water treatment processes.

Tools Required:

1. Philips #1 Screwdriver
2. Isopropyl Alcohol (if available)
3. Lint free, clean cloth

Kit Contents:

1. Cover Screws (x2)
2. Sensor Cover (x1)
3. Cleaning Beads (x2 packs of 15 ea.)
4. Impeller (x1)
5. Wear Ring (x1)

Assembly Overview:

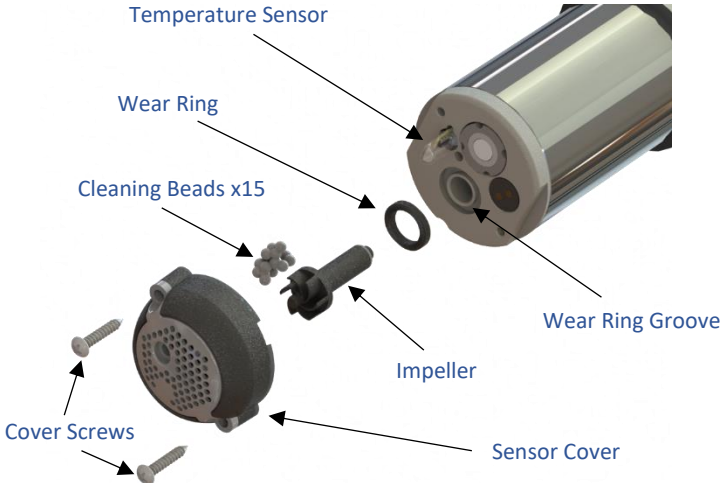

Figure 1: Exploded assembly - bottom view.

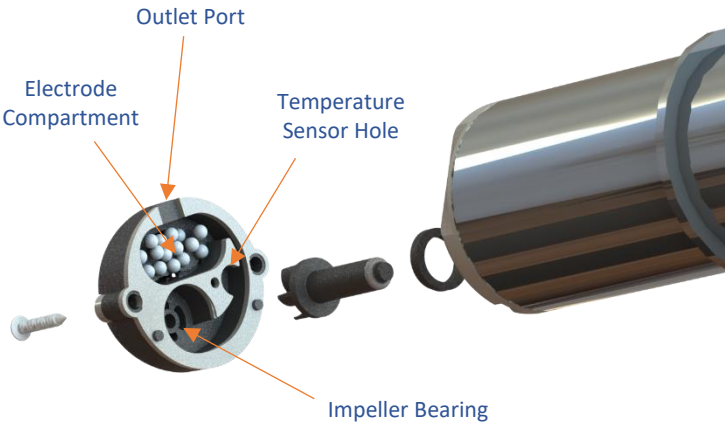

Figure 2: Exploded assembly - correct cleaning bead location.

To remove wear parts: Remove 2x cover screws from the sensor cover. Maintain pressure on the sensor cover and rotate the sensor vertically. Remove the sensor cover and screws from the sensor end while keeping the sensor vertical. Remove the impeller from the impeller well. Impellers are magnetically coupled and should be removed easily. Remove the wear ring. All removed parts can be discarded. If fouling is present, it is permissible to clean the sensor end with Isopropyl Alcohol and lint-free cloth. Take care not to scratch the electrode surface.

To install new wear parts: Remove parts from the replacement wear kit. Install new wear ring into wear ring groove. Install new impeller into impeller well. Place 15 cleaning beads into the sensor end cover (Figure 2). Beads must only be present in the electrode compartment. Align temperature sensor and impeller with respective holes in sensor cover. Lower sensor into sensor cover. Twist the cover gently until the sensor cover guide pins drop into the sensor end. Holding the sensor cover in place, insert, and tighten 2x cover screws until there is no gap between the sensor cover gasket and the sensor end. To prevent motor binding, do not over-tighten.

To function test sensor: Power on the sensor and verify that the impeller spins freely. If the impeller does not spin freely, loosen the cover screws ¼ turn at a time until the impeller can be heard spinning. The sensor can also be run in a bucket with water to verify the water stream from the outlet port.

Copyright © 2023-2024 Halogen Systems, Inc. All rights reserved worldwide.

7.4.2 pH Sensor Replacement

The pH sensor should be replaced every year for the best accuracy. Other than calibration, there is no maintenance required for this sensor. It does not require wet storage when removed from service.

1. Use Halogen Repair Tool (included in kit) and insert prongs into recess in pH sensor (Figure 16 and Figure 17) PN: TOOL-0001
2. Rotate sensor counterclockwise (CCW) to unthread it (Figure 18).
3. Remove the old pH sensor and replace it with the new one (Figure 19).
4. Upon Startup, reset the pH default value.

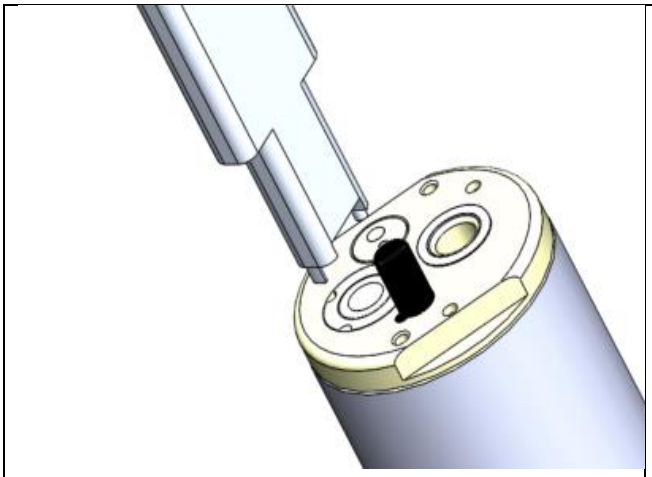

Figure 16: Use Halogen tool and insert prongs into the recess on the pH sensor.

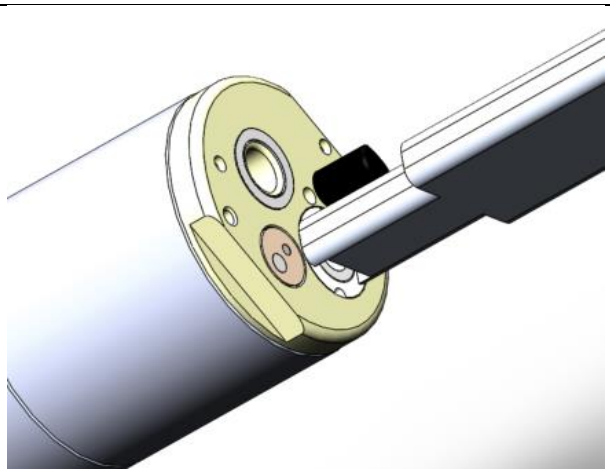

Figure 17: Insert prongs flush with pH Sensor.

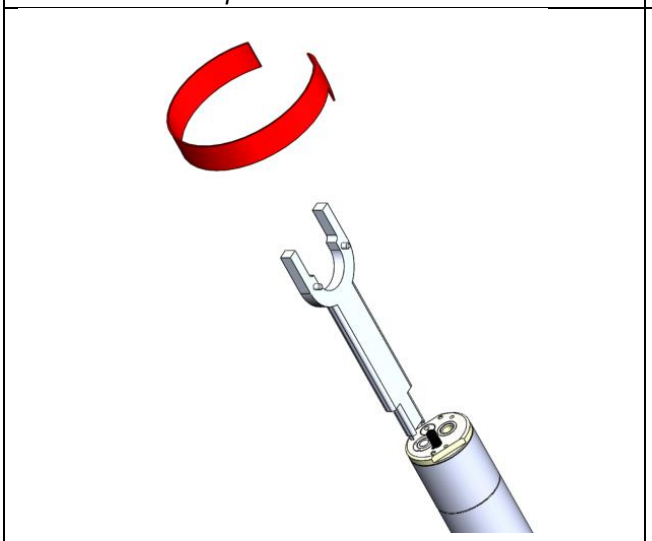

Figure 18: Unthread the sensor by twisting counterclockwise (CCW).

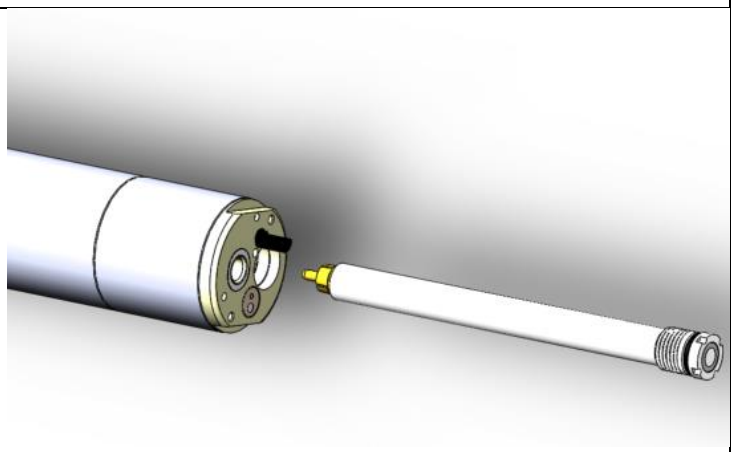

Figure 19: Remove the pH Sensor and discard. Replace with a new one. Make hole is wiped clean. Replacement sensor has silicone grease and an o-ring applied.

7.5. Five Year Maintenance Rebuild

It is recommended to have the factory perform a 5-year rebuild of the sensor to replace the motor assembly and any worn parts.

Copyright © 2023-2024 Halogen Systems, Inc. All rights reserved worldwide.

8. Section 6 Troubleshooting

8.1. Troubleshooting

```
- - - - - - - - - - - - - - - - -
E r r o r :
S e n s o r   N o t   F o u n d
- - - - - - - - - - - - - - - - -
```

This indicates that the display is not communicating with the Wired sensor module. If an M12 connector is present (CN-01 and CN04), then this is likely caused by a sensor problem and your sensor may require replacement.
These steps apply to a Wired sensor (wires connected directly into the terminal block).

1. Check the connection and wiring to the Sensor Module for loose or swapped connections.
2. After correcting the problem, turn the display off and back on.
3. Check the sensor to see if the motor is working.
    a. If not, power and ground lines may be wired backwards. Check and correct.
4. There could be a short in the wiring to the sensor.
5. Check all four wires resistance to ground (sensor housing) with an Ohm Meter.
    a. There could be an internal short from the wires to the sensor from the time the valve adapter was added. Resistance should be open (infinite resistance).
        i. If the motor is working, the com lines may be reversed. Check and correct.
6. If the sensor still does not communicate, then replace it with a new sensor.

Figure 20: Screen indicates no communication with sensor- no sensor address found.

8.2. Level One Problem Codes and Alarms

If an error occurs with the sensor, it will be displayed in the lower right corner of the *Main Screen* (*Figure*).

Main Screen

```
C H L   4 . 9 7
p H   7 . 4 0
O R P   8 0 3   C N D   5 1 5
T e m p   1 8   E R R 1 5
```

Figure 9: Error displayed on Main Screen

Level One Fault Codes (Firmware 1054 and higher)			
These problems will still allow operation of the measurement module and will be cleared when the condition is removed or corrected.			
Error Code	**Meaning**	**Cause**	**Corrective Action**
1	Air in Sensor 10 cycles	Same as 31 but for 10 cycles	Power on and off several times. Make sure sensor is immersed in water. Check installation to ensure outlet port is vertical or perpendicular to flow. (ballast pipe) Check orientation: should be mounted 90° to 270°. Remove sensor from deionized water.
31	Air in Sensor	Air in sensor. The sensor will enter a priming function and try to remove the air. Error will clear automatically when condition is corrected. Sensor ran in deionized water.	
35	Motor RPM very Low	Debris in sensor or worn impeller bearings.	Check for debris in sensor cover. Replace bearings, if worn. See Section 7 of manual for sensor disassembly. Replace impeller and bearings if worn or corroded.

Copyright © 2023-2024 Halogen Systems, Inc. All rights reserved worldwide.

13	Zero calibration out of range	Zero calibration out of range.	Reset zero calibration to zero.

8.3. Level Three Alarm Codes Outside Measurement Range

These errors will cause the Display to flash the backlight and the 4-20 mA output to go negative (<4 mA output). These conditions are outside of the Sensor's operating parameters indicating the displayed results may not be accurate.

Outside Measurement Range Alarms (Firmware 699 and higher Display 227 and higher)			
These problems will still allow operation of the Sensor and will be cleared when the condition is removed or corrected.			
Error Code	**Meaning**	**Cause**	**Corrective Action**
36	Chlorine level exceeds measuring range >30 ppm	Process chlorine level to high-may be inaccurate.	Check process. Replace sensor if TRO level is not accurate.
37	pH low <5	Verify pH with handheld meter.	If sensor is not accurate, replace the pH sensor.
38	pH high >10	Verify pH with handheld meter.	If sensor is not accurate, replace the pH sensor.
39	Conductivity high >65,000 µS	Check sensor operation.	Verify conductivity level and replace sensor with exchange unit if necessary.
40	Temperature high >42°C	Check accuracy of measurement.	If temperature is accurate, reduce process temperature.

8.4. pH Related Error Codes

16	Bad offset	pH Zero not in manufacturer during calibration	This will only appear after unsuccessful calibration and will continue to operate. Replace pH sensor.
17	Bad pH slope	pH slope not in manufacturer specified range during	This will only appear after unsuccessful calibration and will continue to operate. Replace pH sensor.

8.5. Level Two Problem Codes

These types of faults, detected by the system, stop the cycle pending removal or correction of the condition. These errors will generate an alarm condition that will cause the Display to flash the backlight and the 4-20 mA output to go negative (<4 mA output).

Copyright © 2023-2024 Halogen Systems, Inc. All rights reserved worldwide.

Level Two Error Codes			
These problem codes will stop the cycling of the measurement module until corrected.			
Error Code	**Message**	**Cause**	**Corrective Action**
10	Sensor communication problem	Sensor not responding or missing, no communications with the temperature sensor board.	Check sensor connections. Replace sensor with exchange unit.
33	Motor Stalled	Debris in sensor cover.	Check for debris in sensor cover. See Section **Error! Reference source not found. Error! Reference source not found.** for sensor disassembly.

8.6. Diagnostics

The following procedure will bring up important operational information. For technical support, please take a photo of this screen. To display this screen, press the DOWN Arrow button 🡻 from the main display. This will bring up the screen below:

Down Arrow From Main Screen																			
N	a		1	1	4	4				A	U	X		1	1	5	7	m	V
C	L	Z	0				C	L	S	1	0	0	0						
M	S	2	2	0	8		P	H	Z	1	0	0	P	H	S	-	4	5	0
V	M	6	9	9		D	2	2	7		E	R	R	0	.	0	.		

Press the Down Arrow again to display the next set of values:

2 DOWN ARROW FROM MAIN SCREEN																			
p	H		s	e	n	s	o	r		A	2	D		-1	0	1	.		0
p	H		r	e	f		A	2		2	5	1	9						
S	e	n	s	o	r		S	N		1	9	3	5	1	1	4	6		
H	o	u	r	s		2	2	0											

Hours are useful to determine when the 12-month `service should take place (usually after 8,700 hours of operation.

If you need technical support assistance, please take a photo of the main screen, first Down Arrow page and second down arrow pages.
Below is a description of what each of the values refers to. This will be useful for technical support.

Legend for display locations		
Sensor Current		Aux Voltage
Chlorine zero calibration value		Chlorine slope calibration value
Motor Speed	pH Zero calibration value	pH Slope calibration value
Version Sensor	Version Display	Last Errors

Copyright © 2023-2024 Halogen Systems, Inc. All rights reserved worldwide.

Legend for display locations Page 2
pH Signal
pH Reference Signal
Sensor Serial Number
Number of Hours of Operation

- Sensor Serial Number is helpful when requesting technical support.
- Hours of operation is an indication of when wear parts need to be replaced.

8.7. Problems not resulting in an Error Code

8.7.1 Measured water or sensor reading is fluctuating and it is difficult to calibrate sensor

- Put sensor in a bucket with sampled water.
- Take a grab sample and calibrate the sensor.
- Calibrate the sensor and replace into process.

8.7.2 Chlorine and or pH reading is erratic

This is often caused by air. To check the sensor operation, place it is a bucket with sampled water and determine in the value measured is stable over several measurements. If so, then the problem is likely the installation. Air may be present in the sampling stream, or the sensor orientation may be wrong.

Sensor is covered by brown slime or other contaminants

Clean sensor using one of the two methods described in the Maintenance Section in the Appendix.

8.7.3 PLC input does not match the output of the Display

See the Section on Calibration of the 4-20 mA Output in the Appendix.

8.7.4 Immersed sensor is installed in a basin which is drained periodically

Sensor Operation can be stopped without powering off by using the STOP Function below:

8.7.5 Stop Function

- A STOP command will halt measurement until the system is restored.
- Pressing MENU and BACK at the same time will enable the STOP cycle.
- Repeating the sequence will restart the cycle.

9. Section Replacement Parts and Accessories

Wear Part Replacement

Quantity	PN	Description	Frequency
1	**WP-NH**	**Wear Part Replacement Kit including:**	12 Months
1	NCAP-0001	Sensor End Cover Assembly	
1	IMPA-0001	Impeller	
2	CLBL-0001	Bag of 15x 1/8" Acrylic cleaning beads	
1	MTRR-0001	Motor Wear Ring	
2	FSTR-0005	Sensor Cover Screws: No. 4 5/8" 316 SS Self Tapping Phillips	
1	**KITS-0001**	**pH Sensor Replacement Kit including:**	12 Months
1	PHSA-0001	pH Reference Electrode Assembly	
1	TOOL-0001	Tool - pH sensor removal	
1	ORNG-0004	O-ring - #12 NSF61, EPDM, ID: 9.25 mm, CS: 1.78 mm	

Copyright © 2023-2024 Halogen Systems, Inc. All rights reserved worldwide.

1	**RB-01**	**Sensor Rebuild**	60 Months

Flow Cell Parts

Quantity	PN	Description
1	FC-02-A4	Flow Cell Assembly
2	FITG-0003	Push to Connect Fitting - 3/8" NPT
1	SVRC-0001	Sleeve Retaining Collar - Derlin Acetal Resin
1	ORNG-0015	O-ring: #224 NSF61, EPDM, ID: 44.04 mm, CS: 3.53 mm
1	VALV-0007	Speed fit Shut-Off Valve 1/4"

120VAC Display Parts

Quantity	PN	Description
1	FUSE 1	Fuse

10. Models and Options

MP5 is a versatile sensor with several installation options. To select the proper sensor for your application, follow these steps below:

- Select Water Application
- Drinking Water (D), Wastewater (cooling water choose Wastewater option (W)
- Select Mounting Style from Table below: Order the appropriate Accessory that you need for your installation.
- Select Cable length if you need more than the Standard 1.5 M (5’) length.
- Select the Display type that you need.
- There are options for 24VDC, or 120 (universal input)
- Communication options: 4x 4-20 Outputs, or ModbusRTU

10.1. Sensors & Accessories

Sensor PN	Application	Accessory PN	Description	Notes	Cable Lengths	Sensor Connection
D-LF	Drinking Water	FC-02	Side Stream Flow Cell Flow Cell kit low flange	Side stream	5'/ up to 75'	M12-4
W-LF	Wastewater					
D-MF	Drinking Water	PT-01	Direct In pipe -2" PVC Socket Tee with sensor mount adapter medium flange	Direct in pipe	5'/ up to 75'	M12-4
W-MF	Wastewater					
D-MF	Drinking Water	ADAP-0002	Direct In pipe -2" w/Threaded sensor mount adapter medium flange	Use with metal pipe	5'/ up to 75'	M12-4
W-MF	Wastewater					
D-WT	Drinking Water	RMR-WT	Wet Tap with Remover assembly and isolation chamber	Corp Stop Valve and Saddle appropriate for size and material	5'/ up to 75'	M12-4
D-LF	Drinking Water	IM-01	Immersion Sensor with 1'' 45° Adapter or 1" pipe boom mount	Pipe and boom mount not included	5'/ up to 75'	M12-4
W-LF	Wastewater					

Copyright © 2023-2024 Halogen Systems, Inc. All rights reserved worldwide.

10.2. Display Options

PN	Connection	Input Power	Description	**Outputs**	Output Connection	Sensor Connection
D01	Cable Gland PG21	24VDC	Low Voltage Display for SCADA or Solar Power with 2 outputs	2) 4-20 mA	Cable Gland PG21	Cable Gland PG21
D01-4			Low Voltage Display for SCADA or Solar Power with 4 outputs	4) 4-20 mA	Cable Gland PG21	M12-4 Male
CN01	NEMA Plug or conduit	85 to 265 VAC 50/60 Hz	Line Voltage Display cord connected (cord removeable for conduit installation	2) 4-20 mA	M12-8 Female (supplied)	M12-4 Male
CN04				4) 4-20 mA	M12-8 Female (supplied)	M12-4 Male
CN01-M				Modbus RTU Output	M12-8 Female (supplied)	M12-4 Male

Copyright © 2023-2024 Halogen Systems, Inc. All rights reserved worldwide.

11. Appendix- Advanced Functions

All of these actions will require enabling the LONG MENU

11.1. Long Menu Options

The Long Menu adds several options to the Menus. This provides insight into some of the internal calibration values that are useful for troubleshooting.

To enable the Long Menu: press the ➔ and SELECT Key for at least 2 Seconds. You will see a notice that the Long Menu is Now Active. The Long Menu will remain until the Display is powered off and on.

```
_ _ _ _ _ _ _ _ _ _ _ _ _ _ _ _ _ _
L o n g   M e n u   S e l e c t e d
_ _ _ _ _ _ _ _ _ _ _ _ _ _ _ _ _ _
```

Figure 22: Long menu notification (2 seconds)

Main Screen

```
C H L   4 . 9 7
p H   7 . 4 0
O R P   8 0 3   C N D   5 1 5   L
T e m p   1 8
```

Figure 23: Long menu enabled with L Indicator

11.1.1 Delayed Sample CALIBRATION-

This allows up to 10 Minute Time Delay to obtain DPD reading minimum 2 min delay.

This method will store the internal signal value for chlorine in the Display for up to 10 minutes. This allows time after pulling the water sample for the DPD reaction (10 minutes). The stored signal value will be used for the calibration of the sensor. This is useful for a system with fluctuating chlorine levels or where DPD reactions are done further away from the sampling site. If you already have the DPD value you can enter the DPD value at any time during the process.

Navigate to the **CHL Menu**	**Menu | Calibration | CHL Menu**

Select **Known Level.**	`> K n o w n  l e v e l`
	`  C H L  Z E R O  D o n e`
	`  F a s t  C H L  C a l`

Select KNOWN LEVEL	`> T A K E  S A M P L E  1 0 M I N` `  D P D  L E V E L  0 4 . 9 7`

When you have pulled the sample, select **TAKE SAMPLE**. This will start the 10-minute timer and store the signal value.	`  T i m e  9 . 3  M I N  R e m a i n`
	`> E n t e r  D P D  L E V E L  0 4 . 9 7`
	`  S a v e  N o w`

Perform the DPD Reading in DPD Section after obtaining the value Select DPD LEVEL.	`  T i m e  7 . 3  M I N  R e m a i n`
	`  E n t e r  D P D  L E V E L  0 4 . 9 7`
	`> S a v e  N o w`

Copyright © 2023-2024 Halogen Systems, Inc. All rights reserved worldwide.

The cursor will appear below the first digit. Use the arrow keys to select and increment the digit to match the reading to the DPD value. Use the ➔button to select which digit to change to match DPD value and the ↑ ↓buttons to change the value, and press **SELECT** to complete.	
Move the cursor to **Save Now** and press **SELECT**. The following screen will appear.	- - - - - - - - - - - - - - - - - - NOTE: Cal takes many mins - - - - - - - - - - - - - - - - - -
Once the calibration has been saved, the display will return to the main screen.	CHL 4.97 nA 5565 pH 7.40 ORP 803 COND 515 Temp 18

11.2. 4-20 mA Calibration

Navigate to the 4-20 mA Calibration Menu:

Menu | Calibration | 4-20

Use the below menu screen to calibrate 4-20 mA outputs:

4-20 Calibration Menu

```
> 4-20 out                2
  Set out = 4mA
  Adj 4ma DAC        4.00
  Adj 20ma DAC      20.00
```

1. Select output to calibrate (1, 2, 3, or 4) using the up and down arrows.
2. Connect an ammeter to output leads to read the live current of the output to be calibrated.
3. Set display output to 4 mA by hitting select on Set out = until it reads 4mA.
4. The display will start sending the 4-mA signal after selection.
5. Select Adj 4 ma DAC. Value will be 4.00 prior to calibration.
6. Adjust value up or down to calibrate value to the ammeter measurement.
7. After adjusting value, press Select to store the calibration value.
8. Scroll up to Set Out and press Select to set display output to 20 mA.
9. The display will start sending the 20-mA signal after selection.
10. Select Adj 20 mA DAC. Value will be 20.00 prior to calibration.

4-20 Calibration Menu

```
  4-20 out                2
> Set out = 20mA
  Adj 4ma DAC        3.97
  Adj 20ma DAC      20.00
```

Copyright © 2023-2024 Halogen Systems, Inc. All rights reserved worldwide.

11.3. Calibration of Sensor Using pH Buffers

Calibrate pH when replacing a pH sensor using pH 7 and pH 10 buffers. You can obtain these from any laboratory supply.

Calibrate pH

```
> CHL
  COND
  pH
  Calibration default
```

Calibrate pH

```
  Known pH
> Buffer Cal
```

Buffer 7

```
  Is sensor in buf 7?
  Yes
  No
```

1. Place sensor in 7 Buffer solution

Buffer 7

```
  Stabilizing
```

Navigate to Save Buffer 7 menu item

Menu | Calibration | pH |Buffer Cal | Save Buffer 7

2. Wait 60 seconds then Save Buffer 7 menu item and press Select

Buffer 7

```
  Save Value
```

Copyright © 2023-2024 Halogen Systems, Inc. All rights reserved worldwide.

Buffer 7

```
Success
Continue 10buffer?
Yes   No
```

Menu | Calibration | pH |Buffer Cal | Save Buffer 10

Calibrate pH

```
  Save Buffer 7
> Save Buffer 10
  pH 7.48
```

Buffer 10

```
Is sensor in buf 10?
Yes
No
```

3. Place Sensor in 10 Buffer
4. Navigate to Save Buffer 10 menu item
5. Wait 60 seconds then Save Buffer 10 menu item and press Select
6. Return sensor to process

Buffer 10

```
Save Value
```

Buffer 10

```
Success
```

11.4. Temperature Calibration

Activate the Long Menu by holding 'Select' and '→' for 3 seconds
Navigate to **MENU |Calibration | Temp**
Enter desired temperature in Celsius.
Press 'Save Now'

11.5. Changing Modbus Options

MENU |Configuration | Modbus

These options can be used to change the Modbus address of the sensor or identify which sensor the Display is connected to. At power up, the Display will search for all sensors on the bus.

Copyright © 2023-2024 Halogen Systems, Inc. All rights reserved worldwide.

Modbus Options

```
  Slave Address   125
  Change Addr     125
  Bus Search      125
> Modbus Enabled    Yes
```

Figure 20: Select the Modbus item

Select Modbus enabled to use the Display with a PLC or PC Program.

```
  Slave Address   125
  Change Addr     125
> Bus Search      125
```

Figure 21: Bus search will find all available sensors on the bus

11.6. Maintenance

Menu 300 Long

```
  Fast Cal
  Calibration
  Configuration
> Maintenance      V
  Diagnotics
```

Maintenance

```
> Stop
  Replace pH sensor
  Long Menu
  Replace wear parts
```

11.7. Checking the Log File

Diagnostics

```
  Set pH/Cond/CHL
> Logs
  Errors
```

If errors are encountered during operation, it is sometimes useful to view the log file entries. Log file entries are not timestamped but are recorded continuously in a loop. There is a maximum of 65,000 entries. The last log entries appear first. To view the logs press: **MENU | Diagnostics | Log | View Last Log.**

Copyright © 2023-2024 Halogen Systems, Inc. All rights reserved worldwide.

Log File

	M	o	n	i	t	o	r											
>	L	o	g															

Log File

>	V	i	e	w		L	a	s	t		L	o	g					
	E	r	a	s	e		L	o	g	s								
T	o	t	a	l		L	o	g	s		2	5	6	2	7			

A sample log entry is shown below: See the table for detail of what each item means.

Log File

L	o	g		1	9	5			C	H	L		5	.	0	0		
p	H		7	.	8	5		n	A		2	3	0	4	0			
C	N	D	4	5	0	0	0		T	1	9	8		O	R	P	6	5	0
E	r	r	0	0		A	U	X	1	1	9	8		M	T	2	2	0	8

Log File Entry Meanings		
Log	The number of the log being displayed.	
CHL	The chlorine level displayed.	
pH	pH reading.	This is generally not displayed unless enabled in the firmware.
nA	The current (signal) for the chlorine reading.	
CND	Conductivity.	Can be converted to PSU.
T	Temperature reading (decimal not shown).	
ORP	Oxidation Reduction Potential (if enabled in Configuration).	
Err	Error Code.	See Troubleshooting section.
AUX	Indicates if air is present.	Values about 2100 are usually due to air. Can also indicate a chlorine sensor problem.
Mt	Motor speed.	If intermittently zero could indicate air.

11.8. Calibrate Conductivity

To calibrate conductivity, follow these steps.

1. Place the sensor in a solution with a known conductivity
    a. or measure the conductivity with another calibrated meter.
2. Navigate to the Conductivity screen using this sequence:

MENU | Calibration | COND | Cond Known |SELECT

Copyright © 2023-2024 Halogen Systems, Inc. All rights reserved worldwide.

```
  CHL Menu
> COND
  pH
  4- 20
```

3. Use the Right and Left Arrows to select the digit to modify to the match the calibrated reading.
4. Press SELECT to accept the reading and move to the next digit.
5. When complete press BACK to return to the Main Screen.

Calibrate CONDUCTIVITY

```
> Cond  Known      0007 15
```

11.9. Directly Edit Calibration Values

Calibration values may be directly edited. This may simplify small adjustments that might be needed under specific conditions. The Long Menu adds several options to do this under Diagnostics. The following steps may be used to adjust the slope and zero values to adjust the readings without going through the entire calibration process.

Main Screen

```
CHL  4.97
pH  7.40
ORP  803     CND   515  L
Temp  18
```

Figure 23: Long menu enabled with L Indicator

Diagnostics

```
> Set  pH/Cond/CHl
  Logs
  Errors
```

Additional Long Menu Enabled

This Menu selection is used to individually view and adjust individual slope and zero for three measurements: Chlorine, pH, and Conductivity. The screens are shown below.

```
> Set  PH/CHL/COND
  Set  to  Default
```

```
> CHL  Zero  &  Slope
  Conductivity
  pH  Zero  &  Slope
```

```
> CHL  Zero          0000
  CHL  Slope      000000

  CHL.14  282  nA
```

Copyright © 2023-2024 Halogen Systems, Inc. All rights reserved worldwide.

```
> pH   Zero                0030
  pH   Slope              -0554
  Z    163.14    pH    7.89
  S    -50.63    mv
```

```
> Cond  Zero                0000
  Conductivity              0000
  Max   0  Dly   0
  RAW   0  X   0  hi  0
```

11.10. Change Measurement Options

Navigate: **MENU | Configuration | Measurement Options**

Configuration

```
> Meaurement  Options
  Display  Options
  4-20MA  Options
  Modbus
```

Figure 21: Measurement Options

pH and ORP can be turned off. Warning: pH should not be turned off if a pH sensor is present. To stop pH from displaying on main screen disable Dsp pH (no X).

Measurement Options

```
  Do  pH   X  pH  Man   X
  Do  ORP  X
  Deg  F   -
  Do  PS   -
```

Figure 22: Select item to enable or disable

To enable a manual pH reading that will not change, select pH Man by putting X next to this selection. Then enter or adjust the pH value in the calibration menu screen.

The options affect the actual measurements of the sensor.

To disable 0.00 precision on the chlorine reading (0.01), scroll down to the Dsp .01 and put a dash next to this measurement.

If Conductivity is enabled, PSU will not display on Main Screen, only the conductivity value.

11.10.1 Calibration Key Code

Note: A Key Code can be activated to restrict access to calibration settings. To activate the key code, navigate: **Menu | Measurement Options | Key Cde**

The Key Code option is located below the EOC Hold option on the second measurement options screen. Once activated, a code will be required to access the Calibration Menu.

Copyright © 2023-2024 Halogen Systems, Inc. All rights reserved worldwide.

12. Menu Tree v300 and higher

- Main Menu
  - Fast Cal
    - Success
    - Limit reached (low or high)
  - Calibration
    - CHL Menu
      - Delayed Chlorine Cal
        - Take sample
          - DPD Level
            - Save value
            - Success
            - Limit reached (hi or low) e14
      - CHL Zero
        - Is sensor in Zero? Y/N
          - Save Value
            - Success
            - Failed- make sure in zero nnn nA e13
      - Fast Chlorine Cal
        - Success
        - Failed- out of range (hi low) e14
    - COND
      - Cond Known
        - Success
        - Failed out of range
    - pH
      - Single Point Cal
        - Stabilizing….
          - Save Value
          - Success
          - Failed short span or offset-
      - 2 Point Buffer Cal
        - Buffer 7
          - Is sensor in buffer 7? Y
          - Stabilizing…..
            - Save value
              - Success, continue to 10 Buffer Cal? Y/N
              - Failed bad offset nnn, replace sensor e16
        - Buffer 10

Copyright © 2023-2024 Halogen Systems, Inc. All rights reserved worldwide.

- Is sensor in buffer 10? Y
- Stabilizing …..
  - Save value
    - Success
    - Failed short slope try again or replace sensor e17
- Calibration defaults
  - Set to defaults
    - Reset Are You Sure? Y
    - Restarting …
- Configuration
  - Measurement Options
    - Do pH
    - Do ORP
    - Do PS
    - EOC Hld
  - Display Options
    - Disp pH
    - Disp ORP
    - Dsp CND
    - Dsp PSU
    - Dsp .01
    - Key Cde
    - Deg °F
    - Backlite
  - 4-20 mA Options
    - Set 4-20MA Span Upper
      - >4-20 CHL 010.0 set upper limit
      - >4-20 PSU 50 set upper limit
      - >4-20 Temp 50.0 set upper limit
      - >4-20 pH 07.0 set upper limit
    - Select Output 2 Type
      - Select PSU, pH ORP, CND
    - Set 4-20MA Offset (Lower limit or zero)
    - Display Temp F
      - >4-20 Temp 00.0 lower limit or zero for 4 mA
      - >4-20 pH 05.0 lower limit or zero for 4 mA
  - 4-20 mA (Calibration)
    - Set out = 20 mA
    - Adj 4 mA DAC 3.97
    - Adj 20 mA DAC 20.00
  - Modbus Options

Copyright © 2023-2024 Halogen Systems, Inc. All rights reserved worldwide.

- Slave Address
- Change Address
- Bus Search
- Modbus Enabled
- Maintenance
  - Stop
  - Replace pH sensor reset hours
  - Long Menu
  - Replace wear parts reset hours
- Diagnostics
  - Set pH/Cond/CHL
    - Set CHL zero and Slope
      - CHL Zero
      - CHL Slope
    - Conductivity
      - Cond Zero
      - Cond Slope
    - pH Zero & Slope
      - Edit Slope
      - Edit Offset
  - Logs
    - View last log
    - Erase logs
  - Clear Errors

13. Other Installation Methods

13.1. Pipe Installation

- Locate the sensor in a straight length of pipe at least 1.5 times the pipe diameter both in before and after the sensor.
- The sensor should not be exposed to large debris.
- Ideally, the sensor should be mounted in a horizontal position. The Sensor Adapter (SD-40-010) should be installed in a 2” pipe tee fitting with CPVC solvent cement.

Route the cable away from any high voltage conductors. Orient sensor (SD-30-000) with outlet facing perpendicular to flow. Insert the sensor into the Adapter until it seats in the Adapter and tighten the Retaining nut (SD-10-040) to seal the sensor in the plumbing.

Copyright © 2023-2024 Halogen Systems, Inc. All rights reserved worldwide.

ITEM NO.	QTY.	PART NO.	DESCRIPTION
1	1	SP-30-010	Housing Swimming Pool
3	1	HRS_heyco-m4516	Strain Relief
4	1	SD-10-040	RETAINING COLLAR-POOLS
5	1	SNSRCBL	Sensor Cable
6	1	Tee	2 Inch Slip PVC Tee
7	1	CPVC Adapter	Mounting Adapter

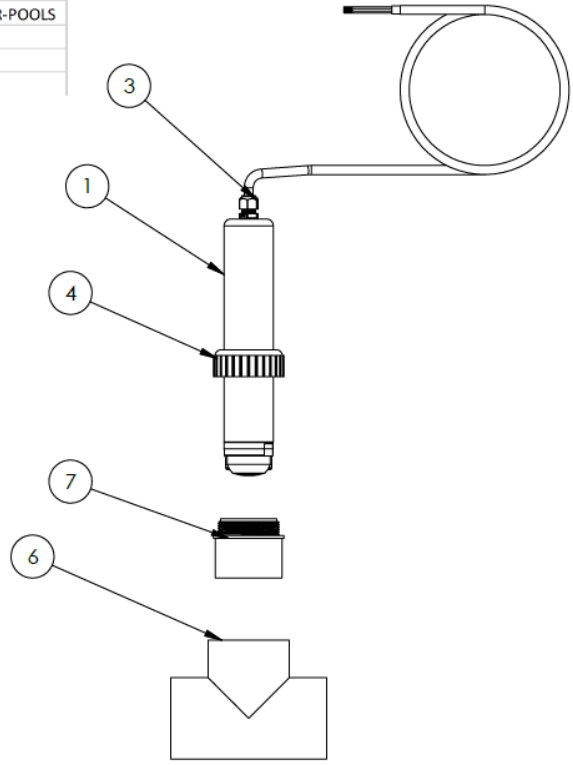

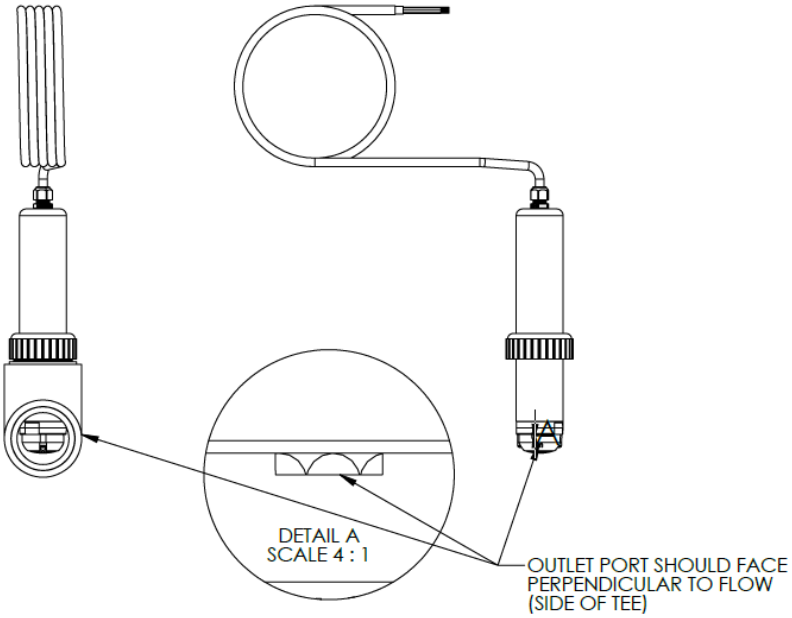

Copyright © 2023-2024 Halogen Systems, Inc. All rights reserved worldwide.

13.2. 24VDC Display

The D01 display (DS-20-000) should be mounted in a dry area, preferably at eye level using the tabs on the enclosure. The side with the single knockout should face downward.

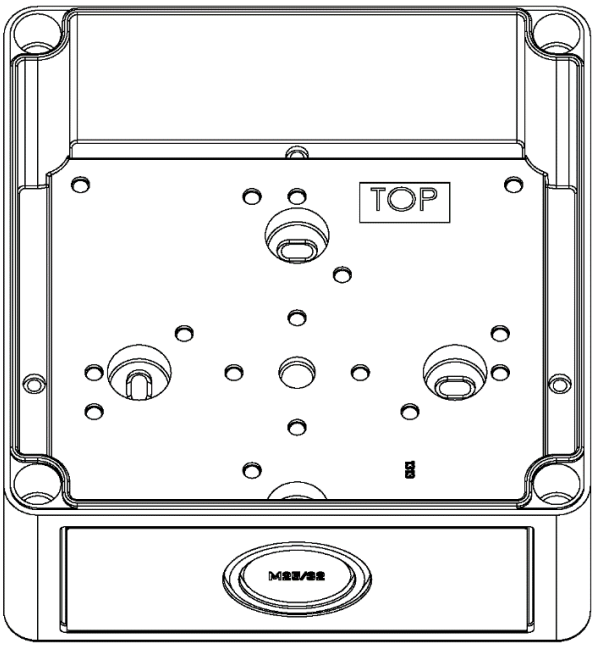

Figure 7: D-01 Display enclosure should be installed single knockout facing downward.

Input Wiring

Ensure that there is a switch or disconnect to power down the system as necessary. Remove the enclosure cover (DS-21-000) by removing the four screws (6-32 X 1.0” FHS).

The Display should be wired for 24 VDC @ 200 mA.

Figure 10:

- Green (or Blue) - RS485 Data B
- White - RS485 Data A
- Black – Ground
- Red - 24V

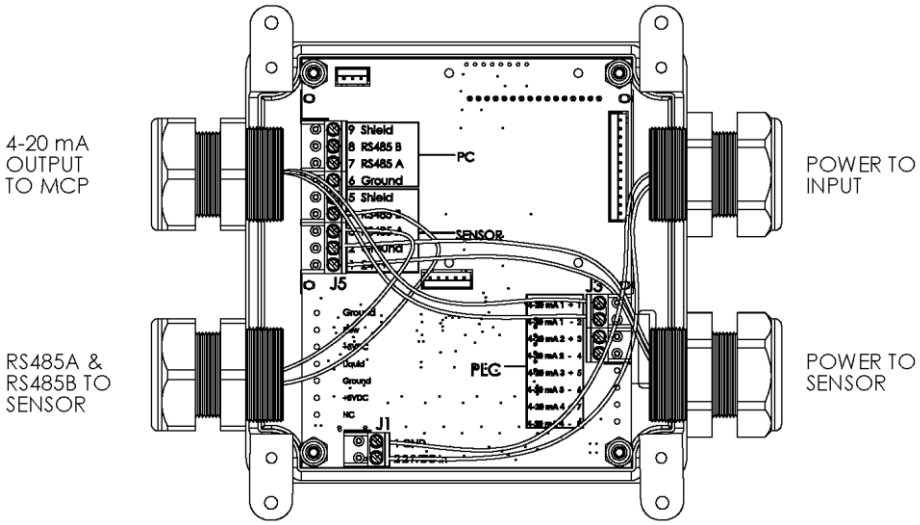

Copyright © 2023-2024 Halogen Systems, Inc. All rights reserved worldwide.

13.3. Immersion Installation

1. Apply Teflon tape or other sealant on the 1” MIP threads on the sensor.
2. Install the sensor using a 45° 1” NPT thread (FIP) by socket adapter on the end of the sensor.
3. Position the sensor so that the outlet port it oriented vertically to purge air with the 45° fitting.
4. Run the sensor cable through a 1” pipe of sufficient length to immerse the sensor at the desired depth without allowing water to enter the pipe.
5. Solvent cement the pipe into the 45 fitting.
6. Mount the sensor using boom or rail mount.
7. Route the cable and secure it outside the tank and away from the water.
8. Connect the sensor plug into the controller.

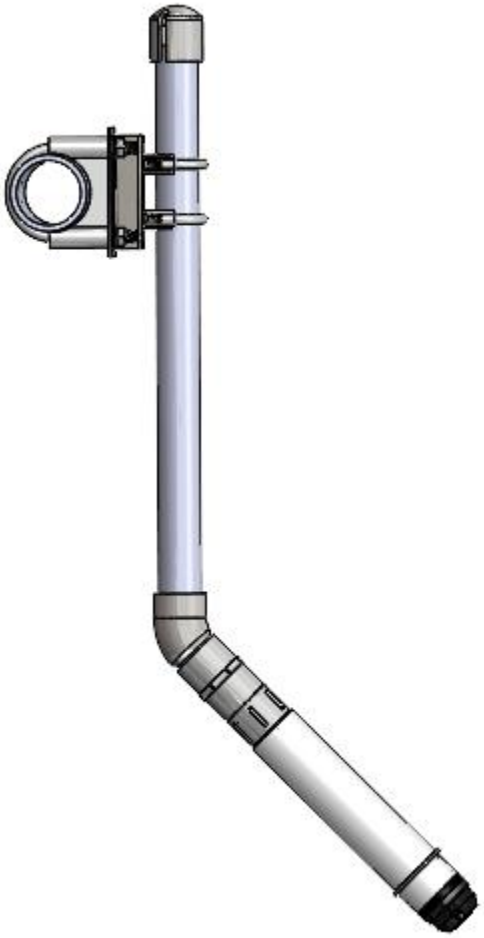

Copyright © 2023-2024 Halogen Systems, Inc. All rights reserved worldwide.

13.4. Solar Panel and Battery for Remote Installations

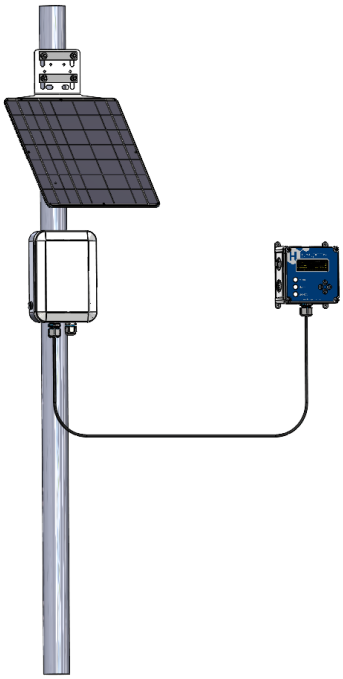

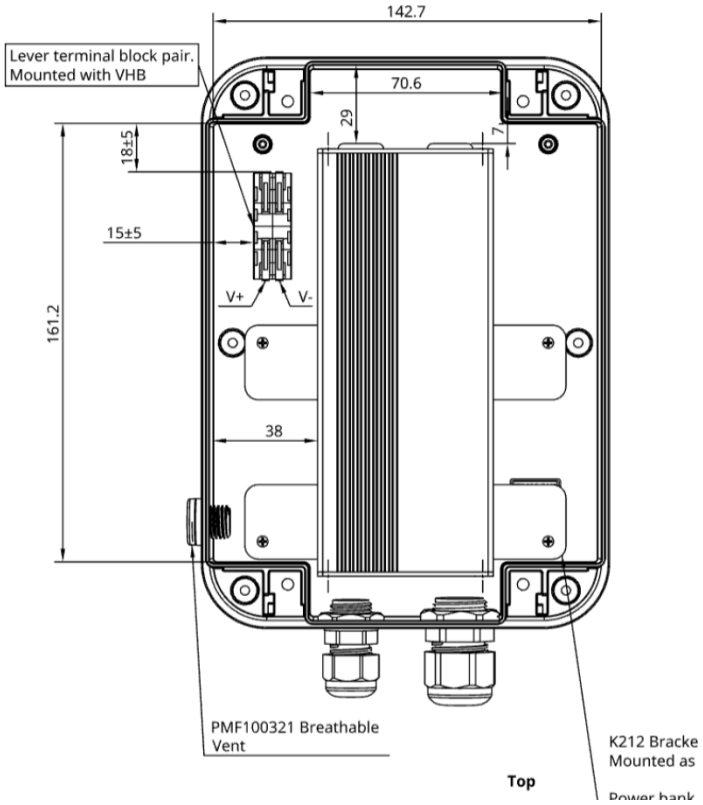

13.4.1 Parts Needed

1. Go to Voltaic Systems Website and select the17 Watt 12 Volt Solar Power System (voltaicsystems.com) (K-P117-V70-E307) Enter Custom Order K-P117-V70-E307-1069. Select the appropriate mounting bracket.
2. Purchase 1 ¾” tube or pipe for mounting the components.

13.4.2 Assembly

1. Follow instructions to assemble panel and enclosure on a 1 ¾” Pipe or tube (not included).
2. Pick a convenient spot for the Display.
3. Wire a two-wire cable using the strain reliefs provided to bring power into the Display enclosure
4. Connect sensor to M12-4 connector.
5. Connect Cellular Modem to appropriate Display output (4-20 or Modbus) following manufacturers instructions and supplied strain relief.

14. Other Documents

Document Name	Description	Date Update
PLC Set Up Guide	Modbus and PLC Integration Instructions	8-17-23
Colorimeter Instructions WT-01-INST	Obtaining a DPD Value Use instructions that came with our device Wet Tap Remover Installation	3-1-22

Copyright © 2023-2024 Halogen Systems, Inc. All rights reserved worldwide.

15. Limited Warranty

Halogen Systems warrants its products to the original purchaser against any defects that are due to faulty material or workmanship for a period of one year from the date of shipment unless otherwise noted in the product manual. In the event that a defect is discovered during the warranty period, Halogen Systems agrees that, at its discretion, it will repair or replace the defective product or refund the purchase price excluding original shipping and handling charges. Any product repaired or replaced under this warranty will be warranted only for the remainder of the original product warranty period.

This warranty does not apply to consumable products such as chemical reagents; or consumable components of a product, such as, but not limited to, lamps and tubing.

Contact Halogen Systems or your distributor to initiate warranty support. Products may not be returned without authorization from the Halogen Systems.

Limitations

This warranty does not cover:

- Damage caused by acts of God, natural disasters, labor unrest, acts of war (declared or undeclared), terrorism, civil strife or acts of any governmental jurisdiction
- Damage caused by misuse, neglect, accident or improper application or installation
- Damage caused by any repair or attempted repair not authorized by the Halogen Systems
- Any product not used in accordance with the instructions furnished by the Halogen Systems
- Freight charges to return merchandise to the Halogen Systems
- Freight charges on expedited or express shipment of warranted parts or products
- Travel fees associated with on-site warranty repair

This warranty contains the sole express warranty made by Halogen Systems in connection with its products. All implied warranties, including without limitation, the warranties of merchantability and fitness for a particular purpose, are expressly disclaimed.

Some states within the United States do not allow the disclaimer of implied warranties and if this is true in your state the above limitation may not apply to you. This warranty gives you specific rights, and you may also have other rights that vary from state to state.

This warranty constitutes the final, complete, and exclusive statement of warranty terms and no person is authorized to make any other warranties or representations on behalf of Halogen Systems.

Limitation of Remedies

The remedies of repair, replacement or refund of purchase price as stated above are the exclusive remedies for the breach of this warranty. On the basis of strict liability or under any other legal theory, in no event shall Halogen Systems be liable for any incidental or consequential damages of any kind for breach of warranty or negligence.

Subject to all Terms and Conditions www.halogensys.com/information

Copyright © 2023-2024 Halogen Systems, Inc. All rights reserved worldwide.

16. DECLARATION OF CONFORMITY

Drinking Water Sensors are tested and certified to:
NSF/ANSI/CAN 61 and 372 – 2020
Certificate date issued: 7/23/2021

120 VAC Displays Also Tested and Certified to:
Safety Requirements for Electrical Equipment for Measurement, Control, and Laboratory Use; Part 1: General Requirements>Valid without technical revision: 01Jan2022< [UL 61010-1:2012 Ed.3+R:16Nov2018]

Safety Requirements for Electrical Equipment for Measurement, Control, and Laboratory Use - Part 2-081: Particular Requirements for Automatic and Semi-Automatic Laboratory Equipment for Analysis and other Purposes [UL 61010-2-081:2019 Ed.3]

Safety Requirements for Electrical Equipment for Measurement, Control, and Laboratory Use Part 1: General Requirements>Valid without technical revision: 23Oct2019< [CSA C22.2#61010-1-12:2012 Ed.3+U1]

Safety Requirements for Electrical Equipment for Measurement, Control, and Laboratory Use - Part 2-081: Particular Requirements for Automatic and Semi-Automatic Laboratory Equipment for Analysis and other Purposes [CSA C22.2#61010-2-081:2019 Ed.3]

Manufacturer's Name:	Halogen Systems, Inc.
Manufacturer's Address:	8985 Double Diamond Pkwy Suite B10, Reno, NV 89521
Type of Equipment:	Multiparameter Sensor and Display
Model No:	D-H1LF-P, D-H1MF-P and D-H1WF-P and CN-01, CN-04

I, the undersigned, hereby declare that the equipment specified above conforms to the above Directive and Standard.

Place: Reno, Nevada USA

Date: November 27,2023

(Signature)
Michael Silveri, President

Copyright © 2023-2024 Halogen Systems, Inc. All rights reserved worldwide.