D20 Controller Module and MP5A Sensor

Product Guide

GETTING TECHNICAL ASSISTANCE

To get assistance for product installation or commissioning, contact Halogen technical support at tech@halogensys.com.

Halogen D20 And MP5A Product Guide

Copyright © 2024 Halogen Systems, Inc. All rights reserved worldwide.
Revision R1.00

PRODUCT SPECIFICATIONS

All specifications and descriptions contained in this document are verified to be accurate at the time of printing. However, because continuous improvement is a goal at Halogen Systems, we reserve the right to make product modifications at any time. Revised editions are found on the manufacturer's website: www.halogensys.com. To communicate any inaccuracies or omissions in this manual, send an e-mail to tech@halogensys.com.

SAFETY INFORMATION

This guide contains important instructions for the Halogen D20™ and the Halogen MP5A™ that should be used for installation and basic setup.

The manufacturer is not responsible for any damages due to misapplication or misuse of this product, including, without limitation, direct, incidental, and consequential damages, and disclaims such damages to the full extent permitted under applicable law. The user is solely responsible for identifying critical application risks and installing appropriate mechanisms to protect processes during a possible equipment malfunction.

Please read this entire manual before unpacking, setting up, or operating this equipment. Pay attention to all danger and caution statements. Failure to do so could result in serious injury to the operator or damage to the equipment. Make sure that the protection provided by this equipment is not impaired. Do not use or install this equipment in any manner other than that specified in this manual.

PRECAUTIONARY LABELS

Read all labels and tags attached to the instrument. Personal injury or damage to the instrument could occur if not observed. A symbol on the instrument is referenced in the manual with a precautionary statement.

	Safety alert: Indicates a hazardous situation that could result in injury or death. If on the instrument, refer to the instruction manual for operation or safety information.
	Risk of electric shock: Indicates components or a procedure that risks electric shock, electrocution, or injury.
	Electrostatic discharge: Indicates the presence of devices sensitive to electrostatic discharge (ESD) requiring that care must be taken to prevent damage to the equipment.
	Disposal: Electrical equipment may not be disposed of in European domestic or public disposal systems. Return old (or end-of-life) equipment to the manufacturer for disposal at no charge.

TRADEMARKS

The unauthorized use of any trademark displayed in this document or on the product is strictly prohibited. D20 and MP5A are trademarks of Halogen Systems, Inc. Multiple US and worldwide patents have been granted to Halogen Systems, Inc. for its unique features of Chlorine measurement system sensor systems.

Gems is a trademark of Gems Sensors, Inc. and Modbus is a registered trademark of Schneider Electric USA, Inc. All other trademarks contained in this document are the property of their respective owners, and any use does not imply sponsorship or endorsement of their products or services by Halogen Systems, Inc.

COMPLIANCE AND CERTIFICATION

CAUTION: This equipment is not intended for use in residential environments and may not provide adequate protection to radio reception in such environments.

Canadian Radio Interference-Causing Equipment Regulation, ICES-003, Class A

This Class A digital apparatus meets all Canadian interference-causing equipment regulations requirements.

Cet appareil numérique de classe A répond à toutes les exigences de la réglementation Canadienne sur les équipements provoquant des interferences.

FCC Part 15, Class A Limits

Supporting test records reside with the manufacturer. The device complies with Part 15 of the FCC Rules. Operation is subject to the following conditions:

1. The equipment may not cause harmful interference.
2. The equipment must accept any interference received, including interference that may cause undesired operation.

Changes or modifications to this equipment not expressly approved by the party responsible for compliance could void the user's authority to operate the equipment. This equipment has been tested and found to comply with the limits for a Class A digital device, pursuant to Part 15 of the FCC rules. These limits are designed to provide reasonable protection against harmful interference when the equipment is operated in a commercial environment. This equipment generates, uses, and can radiate radio frequency energy and, if not installed and used in accordance with the instruction manual, may cause harmful interference to radio communications. Operation of this equipment in a residential area is likely to cause harmful interference, in which case the user will be required to correct the interference at their expense. The following techniques can be used to reduce interference problems:

3. Disconnect the equipment from its power source to verify that it is or is not the source of the interference.
4. If the equipment is connected to the same outlet as the device experiencing interference, connect the equipment to a different outlet.
5. Move the equipment away from the device receiving the interference.
6. Reposition the receiving antenna for the device receiving the interference.
7. Try combinations of the above.

DECLARATION OF CONFORMITY

Drinking Water Sensors are Tested and certified to:

NSF/ANSI/CAN 61 and 372 – 2020

Certificate date issued: 7/23/2021

120VAC Displays Also Tested and Certified to:

Safety Requirements for Electrical Equipment for Measurement, Control, and Laboratory Use; Part 1: General Requirements>Valid without technical revision: 01Jan2022< [UL 61010-1:2012 Ed.3+R:16Nov2018]

Safety Requirements for Electrical Equipment for Measurement, Control, and Laboratory Use - Part 2-081: Particular Requirements for Automatic and Semi-Automatic Laboratory Equipment for Analysis and other Purposes [UL 61010-2-081:2019 Ed.3]

Safety Requirements for Electrical Equipment for Measurement, Control, and Laboratory Use Part 1: General Requirements>Valid without technical revision: 23Oct2019< [CSA C22.2#61010-1-12:2012 Ed.3+U1]

Safety Requirements for Electrical Equipment for Measurement, Control, and Laboratory Use - Part 2-081: Particular Requirements for Automatic and Semi-Automatic Laboratory Equipment for Analysis and other Purposes [CSA C22.2#61010-2-081:2019 Ed.3]

47 CFR § 2.1077 Compliance Information:

Identification of Product: D20 Controller and MP5A Drinking Water Sensor

Responsible Party: Michael Silveri

Address: 8985 Double Diamond Pkwy Suite B10 Reno, NV 89521

This device complies with Part 15 of the FCC Rules. Operation is subject to the following two conditions: (1) this device may not cause harmful interference, and (2) this device must accept any interference received, including interference that may cause undesired operation.

Manufacturer's Name:	Halogen Systems, Inc.
Manufacturer's Address:	8985 Double Diamond Pkwy Suite B10, Reno, NV 89521
Type of Equipment:	Multiparameter Sensor and Display
Model No:	D-H1LF-P and D-H1NF-P and D20

I, the undersigned, hereby declare that the equipment specified above conforms to the above Directive and Standard.

Place: Reno, Nevada USA
Date: May 9, 2024

(Signature)
Michael Silveri, President

Copyright © 2023-2024 Halogen Systems, Inc. All rights reserved worldwide.

Contents

Getting technical assistance i
Product specifications i
Safety information i
Precautionary labels i
Trademarks i
Compliance and certification i
Declaration of Conformity ii

Getting Started 1
Welcome to the Halogen family of products 1
How to use this guide 2

Installation Instructions 4
Step 1: Planning 4
Step 2: Install the D20 display/controller 6
Step 3: Set up the Halogen Sensor 9
Step 4: Start up and commission 10

Installation Checklist 13

Operation Instructions Error! Bookmark not defined.
Meaning of Indicators **Error! Bookmark not defined.**
Calibrating Chlorine Measurement **Error! Bookmark not defined.**
Reference Calibrations 15
Restoring Factory Calibrations 16
Configuration 16
Warnings and Error Codes 21
Maintenance 26

Troubleshooting/FAQ 32
Troubleshooting 32
Common Field Repairable Issues 33
Frequently asked questions 34

Appendix A: D20 Technical Specifications 35

Appendix C: MP5A Technical Specifications 36

Appendix D: Sensors and Accessories 37

Revision History 38

Limited Warranty 40

Index 41

Copyright © 2023-2024 Halogen Systems, Inc. All rights reserved worldwide.

Getting Started

Welcome to the Halogen family of products

The D20 is a multichannel display/controller for Halogen MP6 and other Halogen sensors. The combination of the Halogen D20 and MP6 represents a proprietary hardware and software system enabling real-time insights and intelligent analysis of onsite water quality.

The photograph below shows a demonstration of the D20 display/controller (on the left) and the MP5A sensor (on the right) mounted on a custom backplate to the wall:

The controller shows sensor measurements and other data on the display, transmits analog and digital signals, and interacts with other devices through outputs and relays. Outputs, relays, and sensors are configured and calibrated through the user interface on the front of the controller or remotely for network-connected controllers.

Note: For product information, visit www.halogensys.com or the Halogen information center at www.halogensys.com/resources.

Copyright © 2023 Halogen Systems, Inc. All rights reserved worldwide.

How to use this guide

Special symbols are used throughout the guide and should be taken seriously during the installation and initial commissioning of the Halogen D20 and Halogen MP5A:

	Explosion hazard: Indicates the risk of a severe hazardous situation that could result in serious injury or death.
	Danger: Indicates a hazardous situation that could result in injury or death.
	Warning: Indicates components or a procedure that risks electric shock or injury.
	Caution: Indicates a hazardous situation that could result in minor injury or equipment damage.
Note:	A best practice alert, tip, or technique that results in successful results.

There are four steps to be performed in completing a typical D20 and MP5A installation:

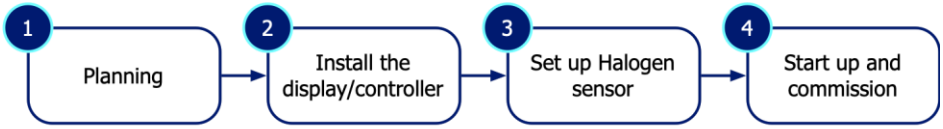

1. **Planning:** Unbox and inspect the box content and gather tools necessary for installation. Make sure the site is ready for product mounting.
2. **Install the display/controller:** Mount the D20 display/controller.
3. **Set up Halogen sensor:** Make sure the connections are set up, turn on water flow, and purge air from the flow cell. A typical installation consists of the flow cell version of the sensor and the 120VAC display/controller. (To learn about other installations, visit the Halogen website.)
4. **Start up and commission:** Connect the MP5A sensor and connect it to the controller. Power on the controller and check the parameters on the display against a colorimeter and a pH meter. If calibration is required, calibrate pH first and then Chlorine.

Copyright © 2023-2024 Halogen Systems, Inc. All rights reserved worldwide.

Copyright © 2023-2024 Halogen Systems, Inc. All rights reserved worldwide.

Installation Instructions

Step 1: Planning

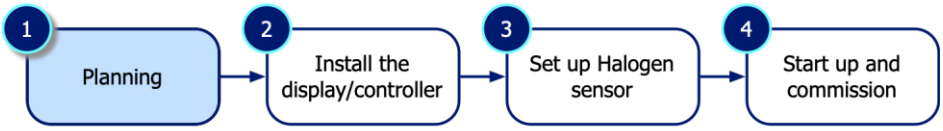

To plan for D20 and MP5A installation, become acquainted with the following:

- Power and connectivity at the site of the installation
- Know what is in the product boxes
- Identify the tools necessary to bring onsite for the installation

AVAILABILITY OF SERVICES AT THE SITE

There are several critical site services that need to be confirmed by the installer:

1. **Power:** For 120VAC operation, you will need a 120VAC (NEMA5) receptacle to plug in the controller. For 240VAC, you must remove the power cable and install the appropriate conduit and fittings (½" trade size conduit fitting).
   The maximum power rating should be correct for the location's ambient temperature.

   Note: Ambient temperature rating refers to the relationship between the label power rating, the application ambient operating temperature, and the actual power capacity after required derating if necessary.

2. **Communication:** For 4-20mA operation, use 8-conductor 22 AWG cabling.
3. **Mount:** The controller should be installed where the power disconnect device for the controller is easily accessible. A minimum of 6.3 in (16 cm) of clearance is required for the controller door to open.
4. **Orientation:** The controller should be installed upright and level to a panel or vertical/horizontal pole.
5. **Site safety:** There must be sufficient clearance around the installation to make connections and to perform maintenance tasks. The installation must be in a location with minimal vibration.

Warning: Externally connected equipment must have an applicable country safety standard assessment.

Explosion hazard: This manual is only for installation of the unit in a non-hazardous location. Use only the instructions and approved control drawing provided in the hazardous location installation manual for installation in hazardous locations.

If you have any questions, contact your Halogen representative.

Copyright © 2023-2024 Halogen Systems, Inc. All rights reserved worldwide.

WHAT'S IN THE BOX

Open the two boxes to show the MP5A sensor and the D20 display/controller:

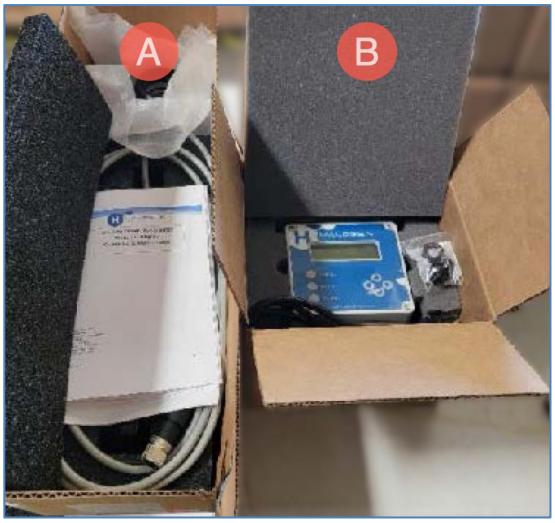

Item	Description
A	MP5A sensor
B	D20 display/controller

Note: product technical details be found in the technical specifications at the end of this guide.

Unpack the cardboard box protection liners and carefully remove its contents. The boxes should contain the following items:

D20 display/controller	MP5A sensor
▪ D20 display/controller ▪ Mounting tabs for wall mount ▪ Strain relief for 4-20mA cable ▪ This installation guide	▪ MP5A sensor for FC installation ▪ Flow cell with push-to-connect tubing fittings ▪ 3/8" tubing (push-to-connect) adapters

If in the unlikely event that something is missing, contact Halogen Systems before proceeding with the installation.

WHAT YOU'LL NEED

You'll need these tools and materials to install the display/controller and the sensor:

- #2 Phillips and flathead screwdrivers
- Screws that are appropriate for mounting the products on a wall or pipe

Depending on how the products will be installed, you may need other tools not described in this guide.

Before proceeding to the next step …

1. Put away the empty boxes and packing material for safe keeping.
2. Determine the best, safest location for mounting the display/controller.
3. Gather all the tools you'll need for the site installation.
4. Don't forget to use our checklist to check off tasks during installation.

Copyright © 2023-2024 Halogen Systems, Inc. All rights reserved worldwide.

Step 2: Install the D20 display/controller

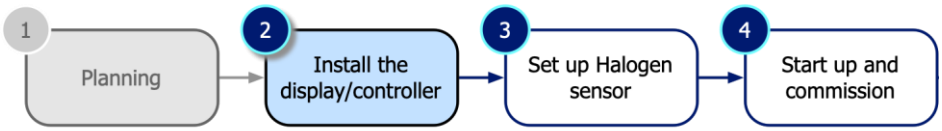

To perform D20 installation, you will:

- Mount the enclosure to a wall
- Mount the D20 to a pole
- Configure the electrical connectors and fittings
- Connect the 4-20mA cabling

MOUNT THE ENCLOSURE

Place the D20 on a flat surface, like a workbench. The maximum area needed for the D20 enclosure and the opened front cover is shown below:

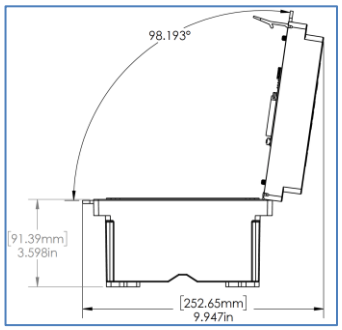

TO MOUNT THE D20 TO A WALL

With the cover closed, carefully place the D20 on a flat work surface exposing the back of the enclosure.

1. Depending on the wall surface, you can align the mounting tabs vertically (L) or horizontally (R). Remove the four screws that secure the mounting tabs, reorient the tabs, and reattach the tabs onto the D20's base.

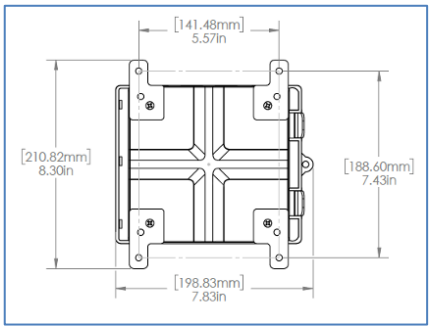

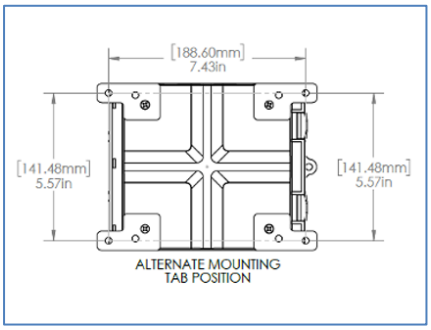

2. Attach the enclosure to the wall with the appropriate wall-mounting screws (not included) that will firmly hold the enclosure to the wall. Make sure that all four corner mounting tabs are attached.

Copyright © 2023-2024 Halogen Systems, Inc. All rights reserved worldwide.

CONNECT ELECTRICAL CONNECTORS AND FITTINGS

At the bottom of the D20 enclosure are the electrical connectors and fittings for the instrument. To maintain the enclosure's environmental rating, ensure the following:

- Strain relief must have an electrical cable that is within its specified diameter range.
- Hole plugs should remain installed onto any unused connectors.

While the D20 controller doesn't require "hard wiring" of connectors, it offers the following connection options:

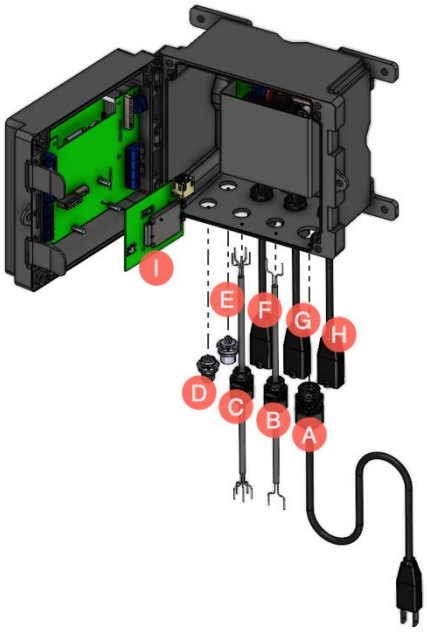

A	120V power*
B	2P conductor wire for alarm (optional)
C	5P conductor wire for liquid and flow sensor (optional)
D	M12 4P connector for Halogen MP5A sensor
E	8P 4-20mA connection (optional)
F	120V power output for controlling pumps* (optional)
G	120V power output for controlling pumps* (optional)
H	120V power output for controlling pumps* (optional)
I	Communications board (BLE and cellular)

*240V available with 1/2" conduit

Warning: Do not plug in the power cable to a power outlet yet!

Copyright © 2023-2024 Halogen Systems, Inc. All rights reserved worldwide.

To gain access to wiring connections, open the controller by unscrewing the four screws on the cover:

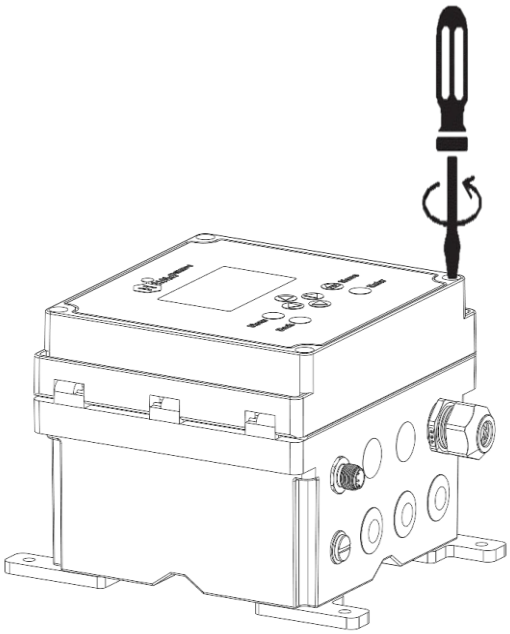

CONNECT THE 4-20MA WIRING

Connect the 4-20mA wiring with an 8-conductor 24AWG cabling (0.21" OD) on the terminal block (in the lower-right corner of the motherboard) using the wiring diagram:

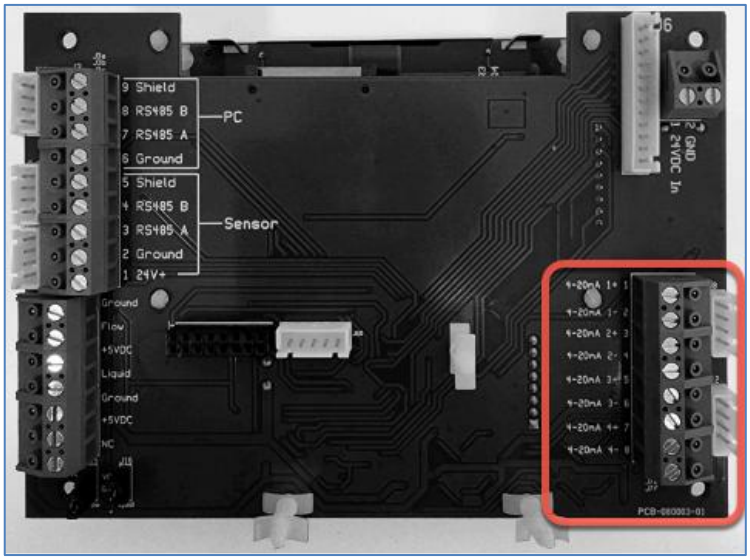

Output	Cabling
1	Chlorine positive (+)
1	Chlorine negative (-)
2	PSU positive (+) or conductivity
2	PSU negative (-) or conductivity
3	Temperature positive (+)
3	Temperature negative (-)
4	pH positive (+)
4	pH negative (-)

Note: The 4-20mA connection is *not* loop powered. The D20 4-20 mA output is an active output.

Copyright © 2023-2024 Halogen Systems, Inc. All rights reserved worldwide.

Step 3: Set up the Halogen Sensor

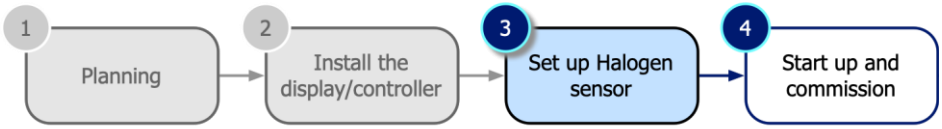

USING THE HALOGEN SIDE STREAM SENSOR

A typical installation consists of the flow cell version of the sensor and the 120VAC display/controller. (To learn about other installations, visit the Halogen website.)

The *Halogen side stream sensor* is a compact device that connects to a drinking water source using ¼" ID tubing. It requires very little flow and is unaffected by changes in the flow rate; however, long tubing may delay readings. The sensor is enclosed in a clear acrylic flow cell designed to purge air. The inlet pressure should be limited to 60 PSI. The flow rate can be from 0.1 LPM to 1.0 LPM.

The sensor is usually connected to a potable water line, as shown below:

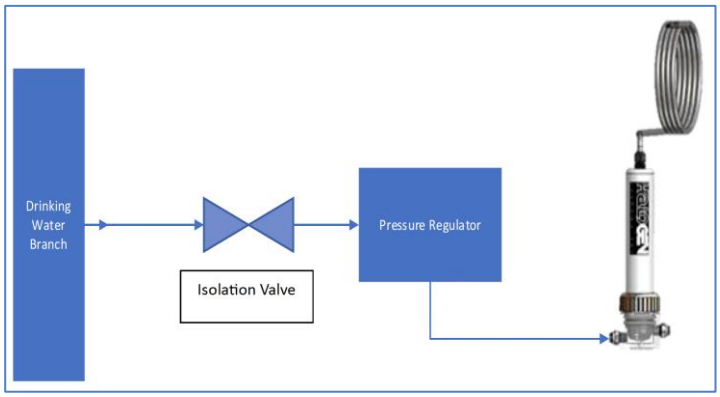

The pressure-reducing valve is needed if the supply water line pressure exceeds 60 PSI/4 Bar. The flow cell is equipped with ¼" *John Guest push-to-connect* (PTC) fittings on both the inlet and the outlet. A short length of tubing is supplied for each connector.

Copyright © 2023-2024 Halogen Systems, Inc. All rights reserved worldwide.

TO INSTALL THE FLOW CELL

The sensor is shipped dry, and once installed and water flow has been established, the pH portion of the sensor will become wet and stabilize, producing accurate readings within 5 minutes. To prepare the Chlorine sensor for operation, do the following:

1. Mount the flow cell on a vertical surface.
2. Insert the sensor into the flow cell with the outlet port of the sensor facing up near the outlet of the flow cell.
3. Seat the sensor firmly (as far as it will go).
4. Hand-tighten the collar thread downward until it stops. Do not force.

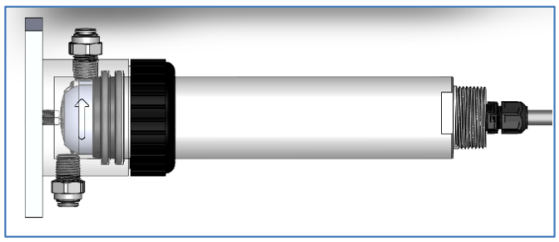

POSITIONING THE FLOW CELL

The flow cell must *always* be installed vertically where the outlet port points upward toward the outlet tubing. This orientation ensures that air bubbles properly clear away from the sensor.

CONNECT DEVICES TO THE M12 CONNECTOR

Connect all digital devices (e.g., sensors and analyzers) to the device connectors on the D20 (see "Connect electrical connectors and fittings"). Keep the unused device connector caps for future use.

Note: Make sure that service cables do not cause a trip hazard, are too tight, or have sharp bends.

Step 4: Start up and commissioning

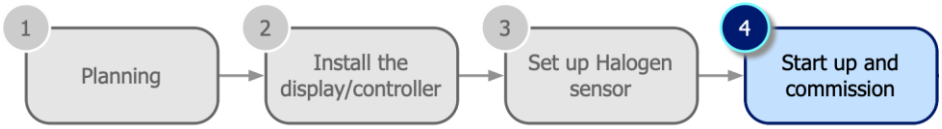

To start up and commission the system, do the following:

- Power up the D20
- Monitor the D20 start-up on the display
- Establish the time of day
- Configure communication

APPLY POWER TO THE D20

Before starting up the display/controller, ensure adequate flow through the flow cell. Plug the D20 power cable into a power outlet.

Copyright © 2023-2024 Halogen Systems, Inc. All rights reserved worldwide.

MONITOR THE D20 START-UP PROCESS

On the display panel, press on the buttons below the display window to select and enter values on the D20:

As the D20 powers up, the display shows a series of status messages:

When the D20 power-up is completed, the sensor will start its start-up sequence. Once completed, all pertinent sensor information is displayed:

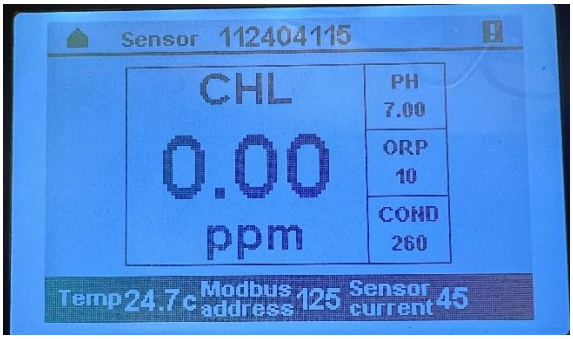

Verify all sensor values displayed on the D20. If pH requires calibration, perform that step first before continuing. Check the Chlorine level using a handheld pocket colorimeter and adjust the calibration as needed.

CONFIGURE COMMUNICATION

The final installation task is communication setup and configuration. Use the arrow keys on the D20 to select menu options (the Enter button accepts the change and the Back button exits the menu screen).

To set up a 4-20mA communication connection to a PLC:

1. Press the **`Menu`** key.
2. Select **`CONFIGURATION`**
3. Select **`4-20 mA OPTIONS`**.
4. Enter **`SELECT OUTPUT CHANNELS`**.
5. Set the desired parameter in the output channels screen.

Copyright © 2023-2024 Halogen Systems, Inc. All rights reserved worldwide.

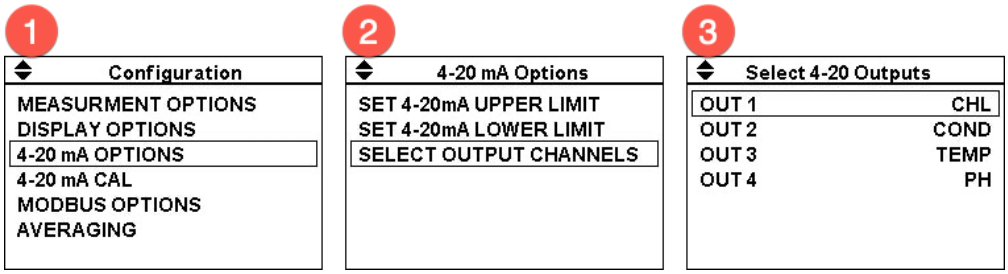

To set the scaling limits between the PLC and the D20:

1. In the **4-20mA Options** menu, select and change the values for **Set 4-20mA Upper Limit**.
2. Back out to the **4-20mA Options** menu, select and change the values for **Set 4-20mA Lower Limit**.

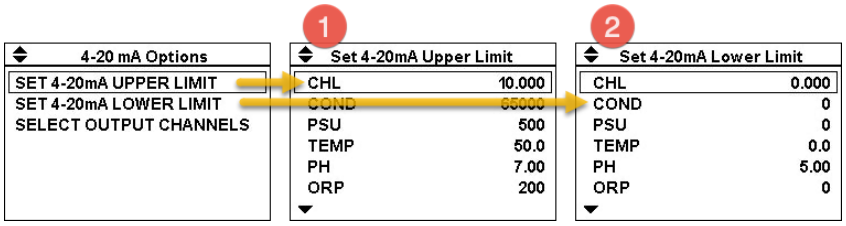

(Optional) To calibrate the outputs:

The 4-20mA outputs on the D20 are already calibrated at the factory. If the settings do not match those on your PLC, select **4-20 mA CAL** option from the **Configuration** menu to recalibrate the channel, 4mA, and 20mA values:

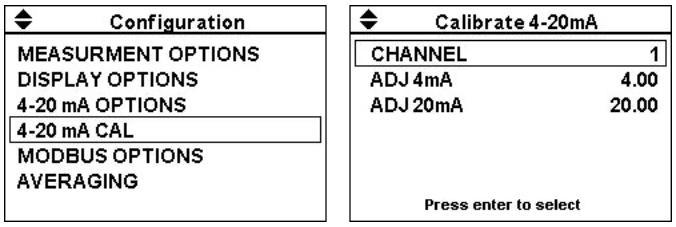

Copyright © 2023-2024 Halogen Systems, Inc. All rights reserved worldwide.

Installation Checklist

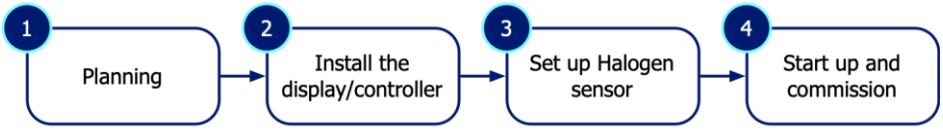

Done	Task
Step 1: Planning	
☐	Make sure power and connectivity services are available at the site
☐	Confirm that everything is included in the box
☐	Gather the tools necessary for the installation
Step 2: Install the D20 display/controller	
☐	Mount the enclosure to a wall or to a pole
☐	Configure the electrical connectors and fittings
☐	Connect the 4-20mA cabling
Step 3: Set up Halogen sensor	
☐	Learn how the Halogen side stream sensor works
☐	Install the flow cell (it must be vertically oriented)
☐	Connect devices to the M12 connector
☐	Allow sensor to warm up for at least 20 minutes
☐	Confirm sensor operation, calibrate as needed
Step 4: Start up and commission	
☐	Power up the D20 display/controller
☐	Monitor the D20 start-up status on its display panel
☐	Set the time of day
☐	Configure communication

Copyright © 2023-2024 Halogen Systems, Inc. All rights reserved worldwide.

Copyright © 2023-2024 Halogen Systems, Inc. All rights reserved worldwide.

Reference Calibrations

Reference Calibration	
CONDUCTIVITY CALIBRATION	3. Navigate to the **Calibrate** menu. 4. Enter the **Cond** Menu. 5. Input the known conductivity value. 6. Press **Select** to save.
ORP CALIBRATION	7. Navigate to the **Calibrate** Menu. 8. Enter the ORP Menu. 9. Input the Known ORP Value 10. Press Select to save.
TEMPERATURE CALIBRATION	11. Navigate to the **Calibrate** menu. 12. Enter the **temp** menu. 13. Input the known temperature value. 14. Press **Select** to save.
SINGLE POINT PH CALIBRATION (Known Value)	1. Navigate to the **Calibrate** menu. 2. Enter the **pH** menu. 3. Select **Single Point pH Cal**. 4. Input known pH value. 5. Press **Select** to save.
2-POINT PH BUFFER CALIBRATION	1. Select **2-point buffer cal**. Note: the system will autodetect both 7 and 10 buffers (not 4 buffer) 2. Rinse sensor and place if first buffer. Select **Buffer 7** or **Buffer 10**. 3. Press **Enter** to start process- sensor motor will turn and turn it off when the pH is stable. 4. Move to rinse water. 5. Select **Finish** or **Continue Buff 7/10** to proceed with next buffer. 6. If **Finish** is selected, 2-point calibration will terminate and return to measurement screen. 7. Move to the next buffer and allow sensor to run in liquid for approx. 1 minute before clicking **Next Buffer**. 8. Measurement screen will appear after calibration is completed successfully.
ENTERING A FIXED PH VALUE	1. If your pH does not change, you can select a fixed pH that the sensor will use for pH compensation. Enable this in **MENU | CONFIGURATION | MEASUREMENT SETTINGS |PH FIXED.** 2. The manual pH level to be used is entered in the **Fixed pH** screen.

Copyright © 2023-2024 Halogen Systems, Inc. All rights reserved worldwide.

Restoring Factory Calibrations

If the sensor settings and calibrations have been modified and the sensor is not measuring correctly or has persistent error codes that cannot be resolved, restoring the factory default calibrations may help resolve the issue.

Note: Restoring the calibration to factory defaults may require you to re-calibrate the sensor for chlorine to ensure accurate measurements.

Steps to Restore Default Calibrations:

1. Navigate to the main menu:
   - Press the **MENU** button.
2. Access the calibration options:
   - Select **Calibrate** from the menu options.
3. Restore to factory defaults:
   - Choose **CALIBRATION DEFAULTS**.
4. Complete the operation:
   - The sensor will automatically restart to complete the restoration process.

By following these steps, you can restore the sensor to its original factory settings and calibrations, which may resolve measurement inaccuracies and persistent error codes.

Configuration

MEASUREMENT OPTIONS

Disabling Measurements

Certain measurements, such as ORP or pH, can be disabled in the measurement sequence. Disabling ORP will reduce the measurement time by 5 to 10 seconds.

Steps to Turn Off ORP or pH Measurements:

Navigate to the menu:

- Press **MENU.**

Access configuration options:

- Select **Configuration.**

Modify measurement options:

- Choose **Measurement Options**.
- Toggle the desired measurement (**ORP** or **pH**) to "**Off**" by following the on-screen prompts.

Copyright © 2023-2024 Halogen Systems, Inc. All rights reserved worldwide.

Enabling Intermittent Measurement

Intermittent measurements can be configured to optimize power usage. This mode measures twice and then shuts down the sensor, activating the motor only during the last 10 seconds of measurement. This option is suitable for setups where the sensor is directly connected to an external data logger without a display.

Steps to Enable Intermittent Measurements:

1. Navigate to the menu:
   - Press **MENU**.
2. Access configuration options:
   - Select **Configuration**.
3. Modify measurement options:
   - Choose **Measurement Options**.
   - Navigate to **Intermittent**.
   - Replace the "**-**" with an "**x**" to enable intermittent measurements.

Note: Intermittent measurements should only be used when the sensor is directly connected to an external data logger and no display is present.

Manually Entering a Fixed pH Value

This setting allows the sensor to use a manually entered pH value instead of measuring the actual pH. This is useful if your pH remains constant and you prefer to use a fixed pH value for compensation.

Steps to Enable and Enter a Fixed pH Value:

1. Navigate to the menu:
   - Press **MENU.**
2. Access configuration options:
   - Select **Configuration.**
3. Modify measurement settings:
   - Choose **Measurement Settings**.
   - Select **pH Fixed**.
4. Enter the manual pH value:
   - In the **pH Fixed** screen, enter the desired pH value to be used for pH compensation.

DISPLAY OPTIONS

This section defines the various options for visual display of information on the Display Module within the **Display Options** menu:

- **3 Decimals:**
  - **Description:** Displays the chlorine value with three decimal places.
  - **Usage:** Provides a more precise chlorine reading.
- **TEMP IN FAHRENHEIT:**

Copyright © 2023-2024 Halogen Systems, Inc. All rights reserved worldwide.

- **Description:** Toggles the temperature display between Celsius (°C) and Fahrenheit (°F).
- **Usage:** Choose your preferred temperature unit for display.

- **`BACKLIGHT:`**
  - **Description:** Turns the LCD backlight on or off.
  - **Usage:** Useful for power savings, especially when the system is connected to a solar panel.
- **`KEYCODE:`**
  - **Description:** When enabled, requires an operator to enter a specific string of key presses to allow calibration.
  - **Usage:** Adds a security measure to prevent unauthorized calibration.
- **`Home Type:`**
  - **Description:** Adjusts the display layout to make the Chlorine reading larger than other readings.
  - **Usage:** Enhances readability of the Chlorine value for quick reference.

By configuring these display options, you can customize the visual output to better suit your operational needs and preferences.

4-20 MA CONFIGURATION

Defining 4-20 mA Outputs

The 4-20 mA output channels can be customized to output any of the available measurement parameters. Follow the steps below to configure the outputs:

Steps to Define 4-20 mA Output Channels:

1. Navigate to the menu:
   - Press **`MENU`**.
2. Access configuration options:
   - Select **`Configuration`**.
3. Enter **`4-20 mA OUTPUT SETUP`**
4. Define output channels:
   - Choose **`Define Output Channels`**.
5. Assign measurement parameters to each channel as needed.

Default Channel Output Assignments:

- **`Out 1:`** `Chlorine`
- **`Out 2:`** `Conductivity`
- **`Out 3:`** `Temperature (°C)`
- **`Out 4:`** `pH`

By following these steps, you can configure the 4-20 mA output channels to suit your specific monitoring needs, ensuring that the most relevant parameters are available for external systems and logging.

Copyright © 2023-2024 Halogen Systems, Inc. All rights reserved worldwide.

Configuring 4 – 20 mA Upper Limit

The upper limit setting allows you to define the maximum measurement parameter value that corresponds to the 20 mA maximum output. It is important to set this value to match the upper limit value of the PLC to which the display is connected.

Steps to Set the 4-20 mA Upper Limit:

1. Navigate to the menu:
   - Press **MENU**.
2. Access configuration options:
   - Select **Configuration**.
3. Configure the 4-20 mA outputs:
   - Choose **4-20 mA OUTPUT SETUP**.
   - **Set 4-20 mA UPPER LIMIT**.
4. Set the upper limit for each measurement parameter as needed.

Default Upper Limit Settings:

- **Chlorine:** 10 ppm
- **Conductivity:** 65000 µS/cm
- **PSU (Practical Salinity Units):** 50
- **Temperature (°C):** 50
- **pH:** 12
- **ORP (Oxidation Reduction Potential):** 1100 mV
- **Pressure:** 200 psi

Configuring 4 – 20 mA Lower Limit

The lower limit setting allows you to define the minimum measurement parameter value that corresponds to the 4 mA minimum output. It is important to set this value to match the PLC to which the display is connected.

Steps to Set the 4-20 mA Lower Limit:

1. Navigate to the menu:
   - Press **MENU**.
2. Access configuration options:
   - Select **Configuration**.
3. Configure the 4-20 mA outputs:
   - Choose **4-20 mA OUTPUT SETUP**.
   - **Set 4-20 mA LOWER LIMIT**.
4. Set the upper limit for each measurement parameter as needed.

Default Upper Limit Settings:

- **Chlorine:** 0 ppm
- **Conductivity:** 0 µS/cm
- **PSU (Practical Salinity Units):** 0
- **Temperature (°C):** 0
- **pH:** 5
- **ORP (Oxidation Reduction Potential):** 0 mV

Copyright © 2023-2024 Halogen Systems, Inc. All rights reserved worldwide.

- **Pressure:** 20 psi

By setting these limits, you ensure that the measurement parameters are correctly scaled to the 4-20 mA output range, providing accurate and consistent data to the PLC and other connected devices.

Calibrating 4 – 20 mA DAC Output

Digital-to-Analog Converter output can be calibrated to match PLC and Halogen readings.

MODBUS COMMUNICATION OPTIONS

This section outlines the Modbus configuration options available through the menu, enabling smoother communication with a PLC and management of sensor addresses.

MENU SELECTION	DESCRIPTION
SLAVE ADDRESSES	Displays the Modbus addresses of all connected sensors.
CHANGE ADDRESS	Allows you to change the address of a connected sensor. Ensure only one sensor is connected when running this option.
START BUS SEARCH	Searches the bus for all connected sensors (up to 10).
BAUD SETTINGS	The default baud rate is 19,200. 115K baud rate can be selected from this menu.

These options provide essential tools for configuring and managing the communication between the Chlorine Analyzer and connected PLC systems, ensuring reliable and efficient operation.

AVERAGING MEASUREMENTS

The averaging measurements setting allows you to average a selected number of measurements for each parameter. This can be particularly useful for water quality monitoring and process control, as it helps to smooth out short-term fluctuations and provides a more stable reading.

When to Use Averaging:

- **Water Quality Monitoring:** Averaging measurements can help in obtaining a more accurate representation of water quality over time, reducing the impact of transient spikes or drops.
- **Process Control:** For processes that require stable input data to adjust or control decisions, averaging can provide more consistent data, leading to better control and decision-making.
- **Noise Reduction:** In environments with high levels of measurement noise, averaging can help in minimizing the impact of these disturbances on the measured values.

Default Setting:

- The default setting for averaging is no filter, indicated by a value of “1”.

Configurable Range:

- The averaging value can be set to any integer between 1 and 20.

Menu Navigation: To configure the averaging of measurements, follow these steps:

1. Navigate to **Configuration**:
2. Select **Averaging**:
3. Set the **Averaging Value**:
4. Choose the desired averaging value (between 1 and 20).

Copyright © 2023-2024 Halogen Systems, Inc. All rights reserved worldwide.

SET SYSTEM TIME

To set the system time on your device, follow these steps:

1. Navigate to System Time:
   - **MENU ➔ CONFIGURATION ➔ SYSTEM TIME**
2. Adjust the Time and Date:
   - The cursor will appear below the first digit.
   - Use the arrow keys to select and increment the digit to match the desired date and time.
   - Use the → button to move to the next digit.
   - Use the ↑ and ↓ buttons to change the value of the selected digit.
3. Save the Settings:
   - Press **ENTER** to confirm the changes.
   - Select **SAVE NOW** to save the new date and time settings.

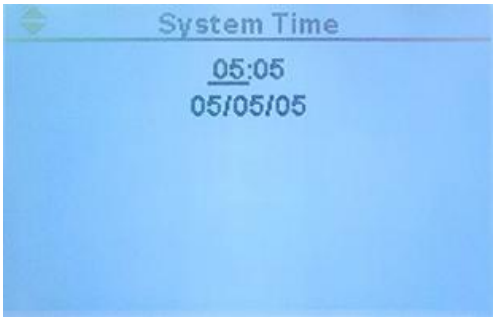

Figure 1: Example Display Screen

Warnings and Error Codes

In the operation of the Chlorine Analyzer, the system provides vital feedback in the form of warnings and error codes. These warnings and codes are reported by the sensor when specific conditions or situations arise, such as out-of-range calibrations or the sensor operating without water. It is essential to understand and address these error codes promptly to maintain accurate and reliable measurements.

These warnings and error codes are categorized into three types:

Type	Description
Warnings	Indicated by an exclamation point (!) in the upper right corner of the display. A warning indicates that a measurement is out of tolerance, or a maintenance task is upcoming. Warning messages can be viewed by pressing the down arrow on the main window. Pressing select on the warning message will display the warning description.
Level 1 Error Codes	Displayed on the display transmitter. These errors may impact accuracy of measurements if left uncorrected.
Level 2 Error Codes	These types of faults, detected by the system, stop the cycle pending removal or correction of the condition. These errors will generate an alarm condition that will cause the Display to flash the backlight and the 4-20 mA output to go negative (≤ 3.8 mA output).

Copyright © 2023-2024 Halogen Systems, Inc. All rights reserved worldwide.

WARNINGS (!)

Message	Cause	Corrective Action	Effect on System
Chlorine Zero	Chlorine zero calibration is out of range.	Use 'Restore to Factory Defaults' command then retry. If unsuccessful, manually set chlorine zero.	Chlorine measurements at low concentrations may be inaccurate until warning is cleared.
Chlorine Slope	Chlorine slope calibration out of tolerance.	Use 'Restore to Factory Defaults' command to clear errors. Confirm reference chlorine value and retry calibration. If still unsuccessful, clean sensor electrode per product guide.	Chlorine measurement may not be accurate across entire operation range.
pH Calibration Slope	Two-point pH slope calibration out of tolerance. pH sensor may require replacement.	Use 'Restore to Factory Defaults' command and attempt 10 buffer recalibration. Replace the pH sensor if recalibration fails.	pH measurements may not be representative of water conditions. If pH measurement erratic, chlorine measurement will be affected.
pH Calibration Offset	Single point or 7 pH buffer calibration out of tolerance. pH sensor may require replacement.	Use 'Restore to Factory Defaults' command and attempt 7 buffer recalibration. Replace the pH sensor if recalibration fails.	pH measurements may not be representative of water conditions. If pH measurement erratic, chlorine measurement will be affected.
Replace Wear Parts	Triggered after sensor has been running for 8040 hours. Wear parts must be replaced within specified number of days.	Replace wear parts and reset wear part countdown timer.	Sensor cleaning and mechanical performance are approaching sub optimal conditions. Chlorine and reference measurements may be adversely affected.

Copyright © 2023-2024 Halogen Systems, Inc. All rights reserved worldwide.

LEVEL 1 ERROR CODES

Error Code	Meaning	Cause	Corrective Action	Effect on System
1	Air in Sensor (10 cycles)	Similar to Error 31 but occurs for 10 cycles	Power the sensor on and off several times or send clear error command. Ensure the sensor is immersed in water. Check the installation to ensure the outlet port is vertical or perpendicular to flow (ballast pipe). Check the orientation, which should be mounted at 90° to 270°. Perform Function Test.	Measurements will be inaccurate and/or erratic. Errors will clear automatically when trigger condition is cleared.
31	Air in Sensor	Air is trapped inside the sensor	The sensor will enter a priming function to remove the air. The error will clear automatically when the condition is corrected. If error will not clear, confirm the sensor is immersed in water. Then, power cycle system or send clear error command. If error persists, perform Function Test.	Erratic chlorine measurement. Errors will clear automatically when trigger condition is cleared.

LEVEL 2 ERROR CODES

Error Code	Meaning	Cause	Corrective Action	Effect on System
33	Motor Stalled	Debris is present in the sensor cover	Power cycle sensor or send clear errors command. Check for debris or impeller binding in the sensor cover and refer to the Wear Parts Replacement instructions for disassembly instructions. Perform Function Test.	4 - 20 mA output negative. Erratic or 0 ppm chlorine regardless of water conditions.
10	Sensor Communication Fault	Sensor not responding or missing, no communications with the temperature sensor board.	Check sensor connections. Initiate Clear Errors Command. Replace sensor with exchange unit.	4 - 20 mA output negative.

WARNING – CHLORINE ZERO OUT OF RANGE

Meaning: Chlorine Zero calibration was completed when the sensors raw signal was outside the acceptable range. This is often a result of completing a chlorine zero calibration when chlorine is still present in the water.

Corrective Action:

1. Use the 'Restore Settings to Factory Defaults' command to clear the error.
2. Recalibrate chlorine zero or manually write chlorine zero (Section 3.2.2).

Copyright © 2023-2024 Halogen Systems, Inc. All rights reserved worldwide.

WARNING – PH OFFSET OUT OF RANGE

Meaning: that pH offset calibration was completed when there was too large a difference between the Halogen Sensor pH mV reading and the attempted pH calibration value. Offset is calibrated via a single point known pH calibration or during pH 7 buffer calibration. This error can also be triggered if the pH measurement is turned off and a pH calibration is attempted. The acceptable offset range is 0 ± 40 mV.

Corrective Action:

Option 1: Recalibrate or replace pH.

1. Use the 'Restore Settings to Factory Defaults' command to clear the error.
2. Confirm that pH measurement is turned on by navigating to MENU | CONFIGURATION | DISPLAY OPTIONS.
3. Select 'Do pH' and use the Up and Down arrows to put an X next to 'Do pH'. X indicates that measuring pH is enabled. Press SELECT to save.
4. Place sensor in pH 7 Buffer and monitor pH mV value until it is stable.
5. Determine if mV value is within the acceptable mV range.
6. Attempt 7 Buffer calibration if within range.
7. If outside of range, replace pH sensor per the Operation and Maintenance Manual.

Option 2: Disable pH

1. Use the 'Restore Settings to Factory Defaults' command to clear the error.
2. Navigate to MENU | CONFIGURATION | DISPLAY OPTIONS
3. Select 'Do pH' and use the Up and Down arrows to put an '–' next to 'Do pH'. The '—' indicates that measuring pH is disabled.
4. Press SELECT to save.

Note: When pH is turned off, the sensor will continue to report pH at 8.05 (or manually fixed pH value) but no longer measure actual water pH. If the system experiences large swings in pH, the sensor will no longer be compensating for the changes in water pH and accuracy may be affected minimally.

WARNING – PH SLOPE OUT OF RANGE

Meaning: A pH 10 buffer calibration was attempted but there was too large a difference between expected pH mV and actual pH mV. The pH slope was out of range a reverted to the maximum acceptable value. The acceptable pH slope range is -79.7 to -39.7. The expected pH mV value in 10 buffer is approximately -180 mV.

Corrective Action:

1. Use the 'Restore Settings to Factory Defaults' command to clear the error.
2. Place the sensor in pH 10 Buffer and monitor pH mV to determine if the mV value is within 30 mV of -180 mV.
3. If within range, attempt pH 10 buffer calibration.
4. If outside of range, replace the pH sensor per the Operation and Maintenance Manual.

ERROR 31 – AIR IN SENSOR

Meaning:
Error 31 is triggered when the AUX voltage is out of range. The acceptable range is -1900 to 1900. This error is most observed when the sensor is running without water, or if air becomes trapped inside the sensor end.

Corrective Action:

Step 1: Clear Errors or Restart Sensor

Option 1: Clearing Errors via Display (Recommended)

Without disconnecting power, follow these steps using the display:

1. Activate the Long menu.

Copyright © 2023-2024 Halogen Systems, Inc. All rights reserved worldwide.

2. Navigate to the Diagnostics section.
3. Select "Clear Errors."
4. The sensor will clear any open error codes, and the motor will initiate a self-priming process by alternately changing the impeller's direction three times.

Option 2: Restarting the Sensor via Display

1. Activate the Long Menu.
2. Navigate to the Maintenance section.
3. Select "Restart System."
4. The display will power down, and the sensor will restart.
5. Errors will be cleared, and the sensor will self-prime.

Option 3: Clearing Errors via Halogen Software (MP5A Connect)

Using the Halogen Software (MP5A Connect):

1. Navigate to the Diagnostics window.
2. Check the board to confirm errors.
3. Press "Clear Errors."

Option 4: Unplugging and Replugging the Sensor

Unplug the sensor from the power supply and then plug it back in to initiate a sensor restart.

Step 2: Monitor Sensor Function and Data Output

After performing the error-clearing process, monitor the sensor's function and data output:

1. Check if the motor is spinning unimpeded.
2. Observe whether the motor changes direction three times and then starts spinning in one direction normally.
3. Ensure that water is flowing from the outlet port in a constant stream.
4. If, after performing the above steps, the error condition persists and Error 31 cannot be reliably cleared, the chlorine sensor may be defective or damaged. In such rare cases, the sensor will require replacement. See Error 1 for more information.

ERROR 33 – MOTOR ERROR

Meaning:

These errors are triggered by changes in the motor's RPM detected by the sensor's tachometer. The tachometer measures only the revolutions of the internal motor and not those of the impeller. Therefore, it is possible to have a bonded impeller while the motor continues to spin internally.

Corrective Actions:

Step 1: Initiate Clear Error Command

Initiate the clear error command using the following steps:

1. Using the sensor's display or software, navigate to the Diagnostics or Error section.
2. Activate the "Clear Error" command.
3. Observe if the error is cleared and the sensor resumes normal operation.

Step 2: Remove Sensor from the System and Perform Function Test

If the error persists, proceed with the following steps:

1. Remove the sensor from the system as per the specific model type's installation manual.
2. Perform a Function Test on the sensor outside of the process. Ensure that the sensor is adequately powered and communicates during this test.

Copyright © 2023-2024 Halogen Systems, Inc. All rights reserved worldwide.

Step 3: Check Impeller for Free Rotation

1. If the Function Test fails or the impeller does not spin freely when the sensor is powered and communicating, proceed to remove the sensor cover following the Wear Parts Replacement instructions.
2. Power on the sensor and check if the impeller can spin freely when the sensor is powered and communicating.

Step 4: Exchange Sensor with Replacement Unit

1. If the impeller no longer spins or remains stuck, exchange the sensor with a replacement unit as per Halogen Systems' replacement procedures.
2. Contact Halogen Systems for further assistance in obtaining a replacement sensor.

Note: Error 33 and Error 35 are motor-related errors, and their corrective actions are similar. These actions are essential to ensure the sensor's proper functioning and prevent further motor-related issues.

ERROR 1 – PERSISTENT ERROR 31

Meaning: Error 1 is triggered after 10 consecutive cycles with Error 31 occurring.

Corrective Action:

Follow Error 31 corrective action steps. If unable to clear, the chlorine electrode or circuit board may have failed, and the sensor will require replacement. See Section 5.4 Field Unrepairable Issues for additional information.

ERROR 10 – ELECTRONICS FAILURE – TEMPERATURE SENSOR FAILURE

Meaning: Error 10 is a result of a communication problem with the temperature sensor circuit board, specifically Electronically Erasable Programmable Read-only Memory or EEPROM. This is most often the result of communication loss, damage, or fault within the temperature sensor board. This failure can be identified by the temperature measurement getting locked on a single value or the appearance of an unusual temperature such as -300 °C. Other indicators include loss of Serial Number (SN appears as 16553565535), loss of stored calibration values, loss of stored settings, and inaccurate measurement parameters.

Corrective Actions:

1. Power cycle or system restart.
2. Reset calibrations to default.
3. If the above fail, replace with spare analyzer, and contact Technical Support.

Maintenance

STOP FUNCTION

WASTEWATER MAINTENANCE

SENSOR CLEANING

FLOW CELL CLEANING

ANNUAL MAINTENANCE

Copyright © 2023-2024 Halogen Systems, Inc. All rights reserved worldwide.

Replacing Wear Parts

Kit Contents:

1. Cover Screws (x2)
2. Sensor Cover (x1)
3. Cleaning Beads (x2 packs of 15 ea.)
4. Impeller (x1)
5. Wear Ring (x1)

Assembly Overview:

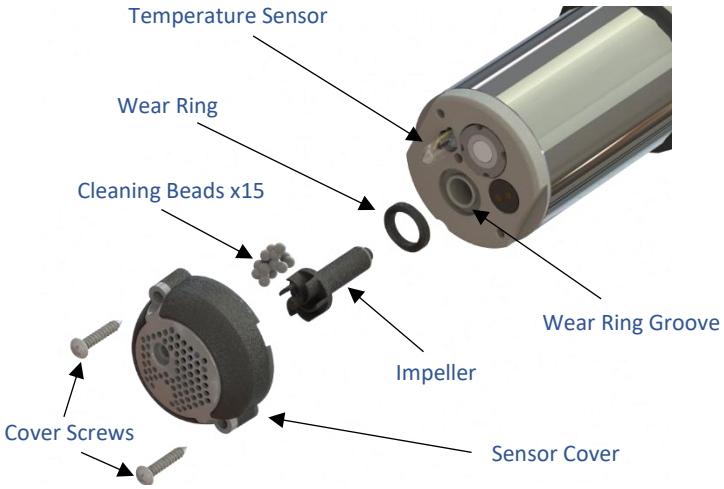

Figure 1: Exploded assembly - bottom view.

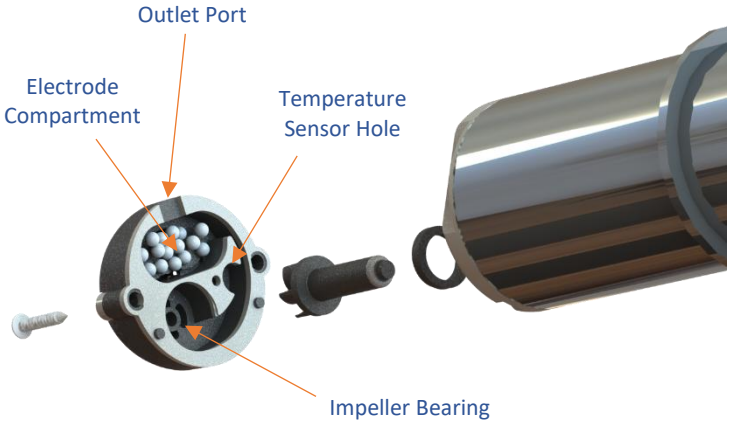

Figure 2: Exploded assembly - correct cleaning bead location.

To remove wear parts: Remove 2x cover screws from the sensor cover. Maintain pressure on the sensor cover and rotate the sensor vertically. Remove the sensor cover and screws from the sensor end while keeping the sensor vertical. Remove the impeller from the impeller well. Impellers are magnetically coupled and should be removed easily. Remove the wear ring. All removed parts can be discarded. If fouling is present, it is permissible to clean the sensor end with Isopropyl Alcohol and lint-free cloth. Take care not to scratch the electrode surface.

To install new wear parts: Remove parts from the replacement wear kit. Install new wear ring into wear ring groove. Install new impeller into impeller well. Place 15 cleaning beads into the sensor end cover (Figure 2). Beads must only be present in the electrode compartment. Align temperature sensor and impeller with respective holes in sensor cover. Lower sensor into sensor cover. Twist the cover gently until the sensor cover guide pins drop into the sensor end. Holding the sensor cover in place, insert, and tighten 2x cover screws until there is no gap between the sensor cover gasket and the sensor end. To prevent motor binding, do not over-tighten.

To function test sensor: Power on the sensor and verify that the impeller spins freely. If the impeller does not spin freely, loosen the cover screws ¼ turn at a time until the impeller can be heard spinning. The sensor can also be run in a bucket with water to verify the water stream from the outlet port.

Copyright © 2023-2024 Halogen Systems, Inc. All rights reserved worldwide.

Replacing and calibrating the pH Sensor

This procedure outlines the removal and replacement of pH reference electrode for Halogen Systems Chlorine Analyzers that possess pH. PH probes utilize a glass membrane and should be handled with care during assembly to prevent damage.

Materials Required:

1. Philips #1 Screwdriver
2. pH Removal Tool (included)
3. pH 7 Buffer
4. pH 10 Buffer
5. Deionized water (tap water OK)

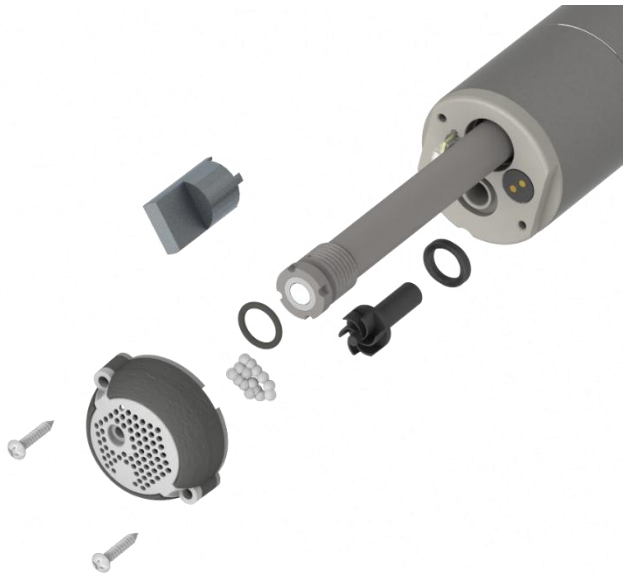

Instructions:

Removal

1. Turn off power to sensor and remove from process.
2. Remove sensor cover screws using Phillips screwdriver.
    a. IMPORTANT: Hold sensor cover in place to prevent cleaning balls from spilling.
3. Rotate sensor vertically to prevent cleaning ball release.
4. Remove sensor cover and set aside.
5. Use pH tool to remove pH electrode.

Installation

1. Remove protective caps from replacement electrode and clean with tap water to remove storage solution.
2. Verify presence of O-ring.
3. Insert pH electrode into sensor end by hand.
4. Tighten with pH Removal Tool until glass membrane is flush with sensor end. NOTE: Avoid tool contact with glass membrane.
5. Verify all cleaning balls (15) are in sensor cover impeller cavity.
6. Reinstall sensor cover by tightening cover screws until gasket is lightly compressed.
7. Return power to sensor to verify unimpeded impeller operation.
    a. If impeller is binding and sensor is unable to prime, loosen cover screws ¼ turn at a time until normal operation resumes.

Calibration

1. Place sensor into pH 7 buffer and power on.
2. Swirl sensor until buffer can be seen coming from ejection port.
3. Allow at least 2 minutes for sensor to equilibrate.
4. Initiate 7 buffer calibration via Display Module, PLC, or MP5A connect program.
5. After calibration is successful, rinse sensor with tap water.
6. Place sensor in 10 buffer.
7. Swirl sensor until buffer can be seen coming from ejection port.
8. Allow at least 2 minutes for sensor to equilibrate.
9. Initiate 10 buffer calibration via Display Module, PLC, or MP5A connect program.
10. After successful calibration, return sensor to process.

Copyright © 2023-2024 Halogen Systems, Inc. All rights reserved worldwide.

Flow Cell Maintenance

Proper maintenance of the flow cell ensures optimal performance and longevity of your Chlorine Analyzer. Follow these guidelines for effective flow cell maintenance:

1. **Cleaning:**
   - The flow cell is transparent, allowing for easy inspection of the sensor condition without interrupting operations.
   - Clean the flow cell by wiping it down or washing it with detergents or diluted acids.

   Important: Do not use solvents for cleaning, as they may cause the acrylic to craze or crack.

2. **O-Ring Maintenance:**
   - Inspect the O-ring annually. Replace it if it appears worn or stiff.
   - Lubricate the O-ring with silicone grease to ensure a good seal and to prolong its life.
3. **Tubing Replacement:**
   - Replace the tubing at least once a year.
   - Immediately replace any tubing that is brittle, cracked, or leaking.
   - Replace old, discolored, fouled, or damaged tubing with new tubing of the same diameter to maintain proper functionality.

By adhering to these maintenance practices, you can ensure the reliable and efficient operation of your Chlorine Analyzer's flow cell.

5 YEAR MAINTENANCE REBUILD

It is recommended to have the factory perform a comprehensive 5-year rebuild of the sensor. This rebuild includes replacing the motor assembly and any worn parts, ensuring the sensor's continued accuracy and reliability.

Copyright © 2023-2024 Halogen Systems, Inc. All rights reserved worldwide.

SD Card Access

The SD card can provide invaluable information to our technical support team regarding the status of the Halogen sensor when errors or faults occur. The D20 logs each sensor measurement into the SD card. The information within the SD card can only be accessed by physically removing the SD card from the D20 and sharing the stored Logfile via a PC or laptop equipped with an SD card reader.

Warning: Do not power the D20 while accessing the inside of the unit.

Instructions:

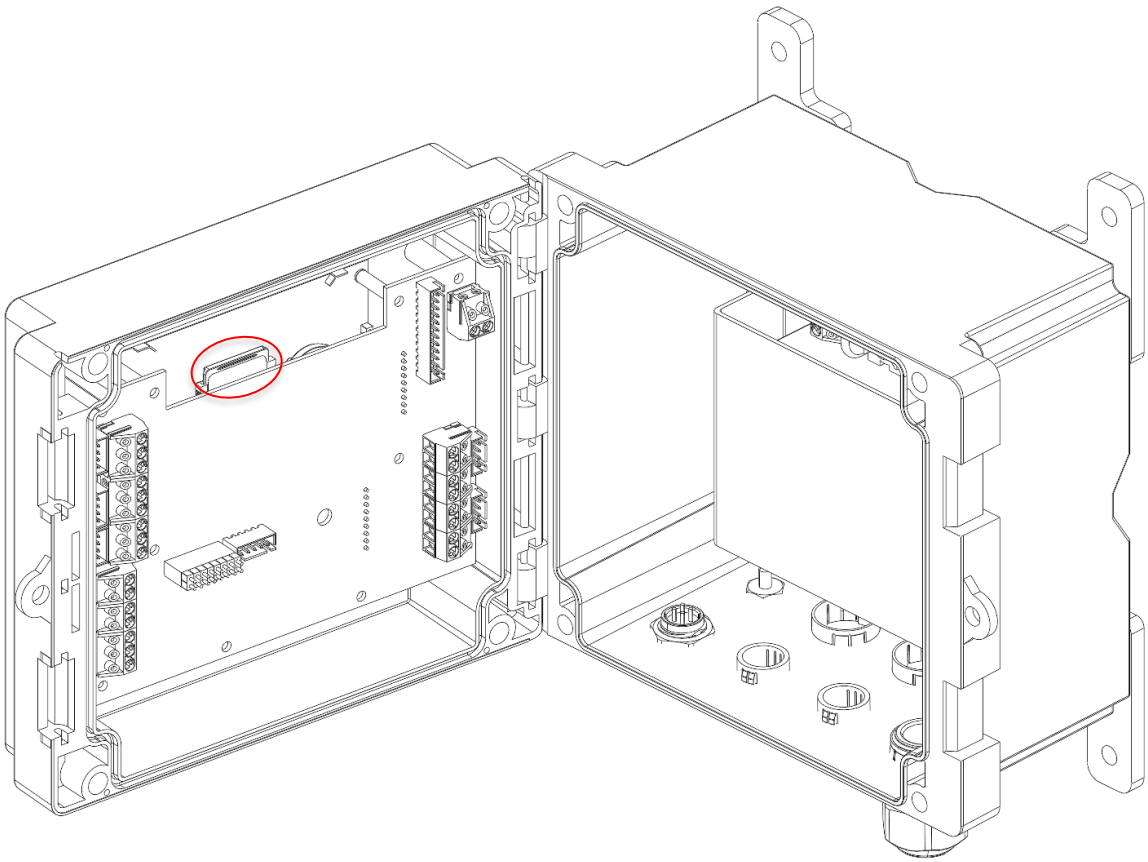

Removal

1. Unfasten the four cover screws on the D20 faceplate.
2. Open the D20 to access the Display PCB found inside the lid.
3. Locate the SD card housed in the SD card holder as shown above.
4. Gently press down on the SD card before pulling it out of the D20.
5. Attach the SD card into a device that has an SD card reader.

Installation

1. With the SD card label facing away from the operator during installation, seat the SD card into the SD card holder.
2. Secure the SD card by pressing it down into the SD card holder.
3. Close the D20 and reattach the cover screws before powering on the unit.

Note: If installed correctly, only the top 1/3” of the SD card will be exposed.

Copyright © 2023-2024 Halogen Systems, Inc. All rights reserved worldwide.

Battery Replacement

The battery powers the real-time clock circuitry while the D20 is not powered. Having a working battery allows Halogen's Technical Support team to diagnose potential sensor issues since logged data will be accurately timestamped. When the D20's system time resets after a power cycle, the battery needs to be replaced.

Warning: Do not power the D20 while accessing the inside of the unit.

Instructions:

Installation:

1. Unfasten the four cover screws on the D20 faceplate.
2. Open the D20 to access the Display PCB found inside the lid.
3. Locate the coin battery housed in the coin battery holder as shown above.
4. Hook your finger at the bottom of the coin battery holder and pull up to expose the coin battery.
5. Pinch and pull on the portion of the coin battery that is exposed.

Removal:

1. Orient the coin battery so that the "+" is **facing away** from the operator.
2. Seat the coin battery into the coin battery holder.
3. Push down on the coin battery until it is fully secured.
4. Close the D20 and reattach the cover screws before powering on the unit.

Copyright © 2023-2024 Halogen Systems, Inc. All rights reserved worldwide.

Troubleshooting/FAQ

TROUBLESHOOTING

Troubleshooting Steps

Step 1: Check Physical Connections
Step 2: Verify Power Supply
Step 3: Check Settings
Step 4: Monitor Data Output
Step 5: Conduct Function Test
Step 6: Isolate the Specific Issue

'Sensor Not Found'

Symptoms

- **`'Sensor Not Found'`** Error on display screen

Corrective Action

4. Check Connections:
    - Inspect the connection and wiring to the Sensor Module for any loose or swapped connections.
2. Power Cycle:
    - After correcting any wiring issues, power the display off and then back on.
3. Verify Sensor Operation:
    - Check if the sensor motor is working.
    - If the motor is not working, check if the power and ground lines are wired backward. Correct the wiring if necessary.
4. Check for Shorts:
    - There could be a short in the wiring to the sensor. Use an ohm meter to check for continuity.
    - Test Resistance:
    - Check the resistance of all four wires to ground (sensor housing) using an ohm meter.
    - There could be an internal short from the wires to the sensor, especially if a valve adapter was added. Resistance should be open (infinite resistance).
    - If the motor is working but communication lines are still not functioning, the com lines may be reversed. Check and correct.
5. Sensor Replacement:
    - If the sensor still does not communicate after following these steps, replace it with a new sensor.

Reference Measurement Inaccuracy

Symptoms

- Inaccurate TRO due to incorrect pH, Conductivity, or Temperature reporting.
- Inaccurate pH, Conductivity, or Temperature reporting

Corrective Action

- See Reference Calibration Section

Copyright © 2023-2024 Halogen Systems, Inc. All rights reserved worldwide.

Erroneous Chlorine Calibration

Symptoms

- Inaccurate TRO
- Erratic TRO

Corrective Action

- See Chlorine Calibration section.

Inadequate Sampling and Air

Symptoms

- Persistent Error 31
- Continuous 0 ppm reporting during ballasting
- Erratic TRO measurement

Corrective Action

- Perform power cycle or send clear errors command.
- Perform Function Test.

Mechanical Operation

Symptoms

- Loud motor sound
- 0 ppm reporting during ballasting
- Error 33/35 presence

Corrective Action

- Function Test.
- Adjust cover tightness.
- Replace Wear Parts.

COMMON FIELD REPAIRABLE ISSUES

A. Impeller Binding – Overtightening of Cover Screws
   Failed pH Probe
   Erroneous Calibration
   “Error Sensor Not Found”

Copyright © 2023-2024 Halogen Systems, Inc. All rights reserved worldwide.

FREQUENTLY ASKED QUESTIONS

Issue (or what if this happens)	Answer
How can I check if any fuses have blown in the D20?	With the D20 cover opened, remove the four screws from the high-voltage shield (1), remove the shield exposing the underlying PCB (2), and replace any blown fuses (3). Use part number: 5x20mm Slow Blow 3.5A.

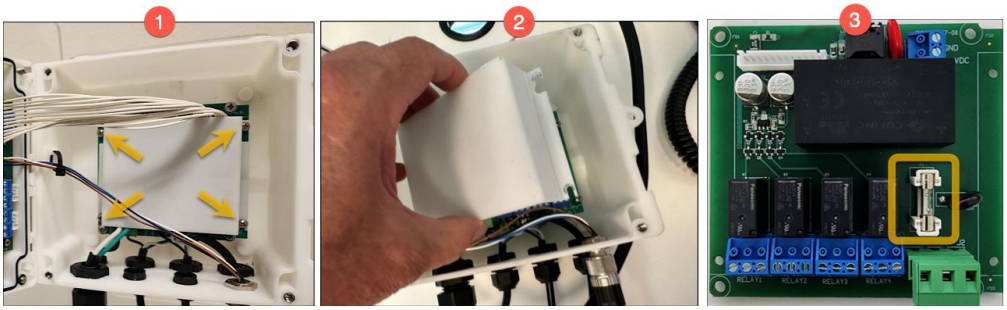

Why is my sensor not communicating via 4 – 20 mA output?	Confirm correct 4 – 20 output is being used. Set 4-20 mA maximum and minimum to scale to PLC.
Why is the sensor not communicating over Modbus?	Confirm wiring. Verify Baud and Parity settings of sensor match master unit. Default for the sensor are 19200 Baud | No Parity
Why is chlorine periodically dropping to 0 ppm via 4 – 20 mA?	Level 1 error codes result in 4-20 mA output going negative (3.8 mA). Error 31 (Air in Sensor) is the most common cause. Confirm sensor orientation and power cycle.
Why is my Chlorine Measurement Erratic?	Air bubbles often cause erratic chlorine measurement. Erratic measurement can also be caused by a defective pH probe or chlorine region switch. See Ballasting Calibration section for more information.
Why is my sensor always reading 0 ppm?	Are there any error codes present? Perform function test to verify motor function. Check sensor settings and reset calibrations to factory defaults. Contact Halogen Support.
Why is Chlorine Reading Low or 0 ppm?	Low chlorine measurement can be caused by inadequate sensor sampling. Confirm sensor orientation, flow to sensor, and motor operation. Perform function test. Restore to factory defaults. Contact Halogen Support.
Why is Chlorine Reading High?	A field calibration to an inaccurate reference can cause high measurements. Confirm flow to sensor. Restore factory default calibrations or recalibrate sensor.
How do I change the sensor Modbus address?	See the 'Changing Modbus Address' instruction in the Halogen Software Guide.
How do I fix inaccurate pH measurements?	Calibrate or replace the pH electrode. pH measurement can also be turned off if calibration or replacement is not available.

Contact Halogen support if you have any questions. We're here to help!

Copyright © 2023-2024 Halogen Systems, Inc. All rights reserved worldwide.

Appendix A: D20 Technical Specifications

Overall*	
Description	Microprocessor-controlled, menu-driven controller that communicates with the sensor
Dimensions	6.3" H x 6.3" W x 4" D (160 x 160 x 101.6 mm)
Weight	3 lbs (display)
Display technology	3.5" TFT
Enclosure rating	IEC/EN 60529–IP 65, NEMA 250 type 4X, plastic enclosure
Installation category	Category II
Compliance certifications	CE, ETL certified to UL and CSA safety standards (with all sensor types), FCC, EU, UKCA
Warranty	12 months

Environmental*	
Operating temperature	-20 to 60°C (-4 to 140°F) (8W (AC)/9W (DC) sensor load) -20 to 45°C (-4 to 113°F) (28W (AC)/20W (DC) sensor load) Linear derating between 45 and 60°C (-1.33 W/°C)
Storage conditions	-20 to 70°C (-4 to 158°F), 0 to 95% relative humidity, non-condensing
Altitude	2000 m (6562 ft) maximum
Pollution degree	4
Temperature	Minimum: -40°F (40°C) Maximum: 167°F (75°C)

Power, data storage, and connectivity*	
Power requirements	85 to 240VAC ±10%, 50/60Hz; 1 A (28W sensor load)
Protection class	I, connected to protective Earth
Measurement interfaces	Two MP5A Modbus connectors
Relays	Three relays (SPDT) Wire gauge: 0.75 to 1.5 mm² (18 to 16AWG) Maximum switching voltage: 100 - 240VAC Maximum switching current: 5A Resistive/1A pilot duty maximum switching power: 1200VA resistive/360VA pilot duty
Communication	Analog: Four 0-20mA (or 4-20mA) analog outputs Digital: Modbus RTU standard
SD card	Used for data upload, software download, capable of est. 1M data points/sensor
Real-time clock	Battery, estimated to last 5 years

* Subject to change without notice

Copyright © 2023-2024 Halogen Systems, Inc. All rights reserved worldwide.

Appendix B: MP5A Technical Specifications

Overall*	
Measurement method	Reagent less, three electrodes, no membrane or electrolyte
Chlorine measurement range - Limit of detection (LOD) - Limit of quantitation (LOQ)	0 to 20 ppm 30 ppb (0.03 ppm) 40 ppb (0.04 ppm)
Resolution	0.001 ppm (1 ppb)
Chlorine accuracy [1]	±5% of the calibrated value1 (DPD) at any pH between 6.5 and 8.75 ±5% of the calibrated value1 (DPD) at any temperature between 15° and 35°C ±4% of the calibrated value1 (DPD) at any conductivity between 200 and 10,000 µS ±10% underflow changes from 0 to 4 meters/second velocity
Calibration stability	6 months (typical)
Measurement interval	60 seconds
pH range (chlorine)	6.5 to 9.0
Conductivity	50 to 10000 µS
Pressure limit	10 bar (145 psi)
Temperature	1 to 55°C
Sample Compensation	Automatic
Factory calibration performed	Yes
Power consumption	24VDC ±10% at 50mA 200 mA startup maximum
Data transfer	Through controller or PLC
Ambient data*	
Storage temperature	-20 to 60°C (-4 to 140°F)
- Operating temperature	1 to 55°C (33 to 131°F)
Maximum flow velocity	0 to 4 meters/sec velocity
Cleaning method	Continuous mechanical cleaning, electrochemical cleaning
Certifications	CE-compliant for conducted and radiated emissions: - CISPOR 11 (Class A limits) Limit of detection (LOD) - EMC immunity EN 61326-1 (industrial limits) NSF61/372 Certified (by ALS Labs)

Copyright © 2023-2024 Halogen Systems, Inc. All rights reserved worldwide.

Appendix C: Sensors and Accessories

Sensor PN[1]	Application	Accessory PN[1]	Description	Notes	Cable lengths	Sensor connection
D-LF	Drinking water	FC-01	Side stream flow cell kit low flange	Side stream	5' (up to 75')	M12-4
W-LF	Wastewater					
D-MF	Drinking water	PT-01	Direct in pipe: 2" PCV socket tee with sensor mount adapter, medium flange	Direct in pipe	5' (up to 75')	M12-4
W-MF	Wastewater					
D-MF	Drinking water	MA-2	Direct in pipe: 2" Threaded sensor mount adapter, medium flange	Use with metal pipe	5' (up to 75')	M12-4
W-MF	Wastewater					
D-NF	Drinking water	WT-01	Wet tap with remover assembly and isolation chamber	Use with corp stop valve and saddle, appropriates for size and material	5' (up to 75')	M12-4
D-LF	Drinking water	IM-01	Immersion sensor with 1" 45° adapter or 1" pipe boom mount	Pipe and boom mount (not included)	5' (up to 75')	M12-4
W-LF	Wastewater					

[1] Part number

Copyright © 2023 Halogen Systems, Inc. All rights reserved worldwide.

Revision History

Revision	Release Date – MM/DD/YYY	Change Notes
R1.00	08/01/2024	Initial Release
R1.01	02/16/2026	The EXT traffic option has been removed ans

Copyright © 2023-2024 Halogen Systems, Inc. All rights reserved worldwide.

Copyright © 2023-2024 Halogen Systems, Inc. All rights reserved worldwide.

Limited Warranty

Halogen Systems warrants its products to the original purchaser against any defects that are due to faulty material or workmanship for a period of one year from date of shipment unless otherwise noted in the product manual.

In the event that a defect is discovered during the warranty period, Halogen Systems agrees that, at its discretion, it will repair or replace the defective product or refund the purchase price excluding original shipping and handling charges. Any product repaired or replaced under this warranty will be warranted only for the remainder of the original product warranty period.

This warranty does not apply to consumable products such as chemical reagents; or consumable components of a product, such as, but not limited to, lamps and tubing.

Contact Halogen Systems or your distributor to initiate warranty support. Products may not be returned without authorization from Halogen Systems.

Limitations

This warranty does not cover:

- Damage caused by acts of God, natural disasters, labor unrest, acts of war (declared or undeclared), terrorism, civil strife, or acts of any governmental jurisdiction
- Damage caused by misuse, neglect, accident, or improper application or installation
- Damage caused by any repair or attempted repair not authorized by the Halogen Systems
- Any product not used in accordance with the instructions furnished by the Halogen Systems
- Freight charges to return merchandise to the Halogen Systems
- Freight charges on expedited or express shipment of warranted parts or products
- Travel fees associated with on-site warranty repair

This warranty contains the sole express warranty made by Halogen Systems in connection with its products. All implied warranties, including, without limitation, the warranties of merchantability and fitness for a particular purpose, are expressly disclaimed.

Some states within the United States do not allow the disclaimer of implied warranties, and if this is true in your state, the above limitation may not apply to you. This warranty gives you specific rights, and you may also have other rights that vary from state to state.

This warranty constitutes the final, complete, and exclusive statement of warranty terms, and no person is authorized to make any other warranties or representations on behalf of Halogen Systems.

Limitation of Remedies

The remedies of repair, replacement, or refund of the purchase price as stated above, are the exclusive remedies for the breach of this warranty. On the basis of strict liability or under any other legal theory, in no event shall Halogen Systems be liable for any incidental or consequential damages of any kind for breach of warranty or negligence.

Subject to all terms and conditions www.halogensys.com/information.

Copyright © 2023-2024 Halogen Systems, Inc. All rights reserved worldwide.

Index

24AWG cabling, 7
4-20mA wiring, 7
advanced features, 12
checklist, 14
Chlorine level, 10
colorimeter, 2
commissioning, 2
commissioning step, 2
compliance and certification, i
connect to PLC, 11
D20
  connectors, 6
  installation, 5
  mounting to a pole, 6
  mounting to a wall, 5
  opening the cover, 7
  specification, 16
  start-up, 10
display options, 18
flow cell
  installation, 9
  orientation, 9
flow sensor interlock, 13
Gems™ Sensors, 13
Halogen side stream sensor, 8
inspection step, 11
installation of the display/controller step, 2
installation step, 5
John Guest push-to-connect *(PTC) fittings*, 8
limited warranty (Halogen Systems), 19
loop powered, 7
mounting, 5
MP5A
  installation, 12
  specification, 17
planning step, 2, 3
potable water line, 8
power, 3
precautionary labels, i
safety information, i
sensor connections, 12
sensors and accessories, 18
services at site, 3
technical specification
  D20 display/controller, 16
technical support, ii
time of day, setting, 10
trademarks and copyrights, i
troubleshooting and FAQ, 15
warranty, 19
what you'll need, 4
what's included, 4

Copyright © 2023-2024 Halogen Systems, Inc. All rights reserved worldwide.