D20 Controller Module and MP-Total Sensor

Product Guide

GETTING TECHNICAL ASSISTANCE

To get assistance for product installation or commissioning, contact Halogen technical support at tech@halogensys.com.

Halogen D20 Controller and MP-Total Sensor Product Guide

Copyright © 2024 Halogen Systems, Inc. All rights reserved worldwide.
Revision R1.05

PRODUCT SPECIFICATIONS

All specifications and descriptions contained in this document are verified to be accurate at the time of printing. However, because continuous improvement is a goal at Halogen Systems, we reserve the right to make product modifications at any time. Revised editions are found on the manufacturer's website: www.halogensys.com. To communicate any inaccuracies or omissions in this manual, send an e-mail to tech@halogensys.com.

SAFETY INFORMATION

This guide contains important instructions for the Halogen D20™ and the Halogen MP-Total™ that should be used for installation and basic setup.

The manufacturer is not responsible for any damages due to misapplication or misuse of this product, including, without limitation, direct, incidental, and consequential damages, and disclaims such damages to the full extent permitted under applicable law. The user is solely responsible for identifying critical application risks and installing appropriate mechanisms to protect processes during a possible equipment malfunction.

Please read this entire manual before unpacking, setting up, or operating this equipment. Pay attention to all danger and caution statements. Failure to do so could result in serious injury to the operator or damage to the equipment. Make sure that the protection provided by this equipment is not impaired. Do not use or install this equipment in any manner other than that specified in this manual.

PRECAUTIONARY LABELS

Read all labels and tags attached to the instrument. Personal injury or damage to the instrument could occur if not observed. A symbol on the instrument is referenced in the manual with a precautionary statement.

	Safety alert: Indicates a hazardous situation that could result in injury or death. If on the instrument, refer to the instruction manual for operation or safety information.
	Risk of electric shock: Indicates components or a procedure that risks electric shock, electrocution, or injury.
	Electrostatic discharge: Indicates the presence of devices sensitive to electrostatic discharge (ESD) requiring that care must be taken to prevent damage to the equipment.
	Disposal: Electrical equipment may not be disposed of in European domestic or public disposal systems. Return old (or end-of-life) equipment to the manufacturer for disposal at no charge.

TRADEMARKS

The unauthorized use of any trademark displayed in this document or on the product is strictly prohibited. D20 and MP-Total are trademarks of Halogen Systems, Inc. Multiple US and worldwide patents have been granted to Halogen Systems, Inc. for its unique features of Chlorine measurement system sensor systems.

Gems is a trademark of Gems Sensors, Inc. and Modbus is a registered trademark of Schneider Electric USA, Inc. All other trademarks contained in this document are the property of their respective owners, and any use does not imply sponsorship or endorsement of their products or services by Halogen Systems, Inc.

COMPLIANCE AND CERTIFICATION

CAUTION: This equipment is not intended for use in residential environments and may not provide adequate protection to radio reception in such environments.

Canadian Radio Interference-Causing Equipment Regulation, ICES-003, Class A

This Class A digital apparatus meets all Canadian interference-causing equipment regulations requirements.

Cet appareil numérique de classe A répond à toutes les exigences de la réglementation Canadienne sur les équipements provoquant des interferences.

FCC Part 15, Class A Limits

Supporting test records reside with the manufacturer. The device complies with Part 15 of the FCC Rules. Operation is subject to the following conditions:

1. The equipment may not cause harmful interference.

2. The equipment must accept any interference received, including interference that may cause undesired operation.

Changes or modifications to this equipment not expressly approved by the party responsible for compliance could void the user's authority to operate the equipment. This equipment has been tested and found to comply with the limits for a Class A digital device, pursuant to Part 15 of the FCC rules. These limits are designed to provide reasonable protection against harmful interference when the equipment is operated in a commercial environment. This equipment generates, uses, and can radiate radio frequency energy and, if not installed and used in accordance with the instruction manual, may cause harmful interference to radio communications. Operation of this equipment in a residential area is likely to cause harmful interference, in which case the user will be required to correct the interference at their expense. The following techniques can be used to reduce interference problems:

3. Disconnect the equipment from its power source to verify that it is or is not the source of the interference.
4. If the equipment is connected to the same outlet as the device experiencing interference, connect the equipment to a different outlet.
5. Move the equipment away from the device receiving the interference.
6. Reposition the receiving antenna for the device receiving the interference.
7. Try combinations of the above.

DECLARATION OF CONFORMITY

Intertek
5022639

Product Name: MP5A, MP-Total and D20 Displays
Manufacturer: Halogen Systems, Inc.
Address: 8985 Double Diamond Pkwy Suite B10, Reno, NV 89521, USA
Responsible Party: Michael Silveri, President

We, Halogen Systems, Inc., hereby declare that the following products:

- **Objects of Declaration**: D20-H Controller, D-H1LF-P, including MP5A and MP-Total product families
- **Type of Equipment**: Multiparameter Sensor and Display
- **Model Numbers**: D-H1LF-P, D-H1NF-P, and D20-H

Conform to the following standards and directives:

1. **NSF/ANSI/CAN 61 and 372 – 2020**
   Certificate issued: 07/23/2021
   Products: D-H1LF-P, D-H1NF-P, and D-H1MF-P
2. **FCC Compliance:**
   - 47 CFR § 2.1077 of FCC Part 15, Subpart B; Class A & ICES-003
   - Compliance and testing completed by Compatible Electronics
   - Operation subject to the following conditions:
     (1) This device may not cause harmful interference.
     (2) This device must accept any interference received, including interference that may cause undesired operation.
3. **Safety Standards for Electrical Equipment for Measurement, Control, and Laboratory Use:**
   - UL 61010-1:2012 Ed.3+R:19Jul2019 (Part 1: General Requirements)
   - UL 61010-2-081:2019 Ed.3 (Part 2-081: Particular Requirements for Automatic and Semi-Automatic Laboratory Equipment for Analysis and Other Purposes)
   - CSA C22.2#61010-1-12:2012 Ed.3+U1;U2;A1 (Part 1: General Requirements)
   - CSA C22.2#61010-2-081:2019 Ed.3 (Part 2-081: Particular Requirements for Automatic and Semi-Automatic Laboratory Equipment for Analysis and Other Purposes)
   - Certification issued by Intertek. Certification Number: 5022639.
4. **Electromagnetic Compatibility (EMC) Standards:**
   - EN 61326-1, EN 61000-3-2, EN 61000-3-3
   - CISPR 11, IEC 61000-4-2, IEC 61000-4-3, IEC 61000-4-4, IEC 61000-4-5, IEC 61000-4-6, IEC 61000-4-8, IEC 61000-4-11
   - Compliant with EMC Directive 2014/30/EU.

Declaration:

I, the undersigned, hereby declare that the equipment specified above conforms to the listed directives and standards.

Copyright © 2023-2024 Halogen Systems, Inc. All rights reserved worldwide.

Place: Reno, Nevada USA
Date: August 27, 2024

(Signature)
Michael Silveri, President

Contents

Getting technical assistance i
Product specifications 2
Safety information 2
Precautionary labels 2
Trademarks 2
Compliance and certification 2
Declaration of Conformity 3

Getting Started 5
Welcome to the Halogen family of products 5
How to use this guide 6

Installation Instructions 7
Step 1: Planning 7
Step 2: Install the D20 display/controller 9
Step 3: Set up the Halogen Sensor 12
Step 4: Start up and commission 13

Installation Checklist 16

Operation Instructions 17
Meaning of Indicators 17
Calibrating Chlorine Measurement 18
Reference Calibrations 22
Restoring Factory Calibrations 23
Configuration 23
Warnings and Error Codes 29
Maintenance 34

Troubleshooting/FAQ 41
Troubleshooting 41
Common Field Repairable Issues 42
Frequently asked questions 43

Appendix A: D20 Technical Specifications 44

Appendix B: MP-Total Technical Specifications 45

Appendix C: MP5A Technical Specifications 46

Appendix D: Sensors and Accessories 47

Appendix E: D20 Control and Relay Operation 47
E.1 Controller PCB Board 48
E.2 Setting Up Alarms 54
E.3 Install the Flow sensor 55
E.4 Controller Troubleshooting 58

Revision History 58

Copyright © 2023-2024 Halogen Systems, Inc. All rights reserved worldwide.

Limited Warranty 60
Index 61

Getting Started

Welcome to the Halogen family of products

The D20 is a multichannel display/controller for Halogen MP-Total and other Halogen sensors. The combination of the Halogen D20 and MP-Total represents a proprietary hardware and software system enabling real-time insights and intelligent analysis of onsite water quality.

The photograph below shows a demonstration of the D20 display/controller (on the left) and the MP5 sensor (on the right) mounted on a custom backplate to the wall:

The controller shows sensor measurements and other data on the display, transmits analog and digital signals, and interacts with other devices through outputs and relays. Outputs, relays, and sensors are configured and calibrated through the user interface on the front of the controller or remotely for network-connected controllers.

Note: For product information, visit www.halogensys.com or the Halogen information center at www.halogensys.com/resources.

Copyright © 2023-2024 Halogen Systems, Inc. All rights reserved worldwide.

How to use this guide

Special symbols are used throughout the guide and should be taken seriously during the installation and initial commissioning of the Halogen D20 and Halogen MP-Total:

	Explosion hazard: Indicates the risk of a severe hazardous situation that could result in serious injury or death.
	Danger: Indicates a hazardous situation that could result in injury or death.
	Warning: Indicates components or a procedure that risks electric shock or injury.
	Caution: Indicates a hazardous situation that could result in minor injury or equipment damage.
Note:	A best practice alert, tip, or technique that results in successful results.

There are four steps to be performed in completing a typical D20 and MP-Total installation:

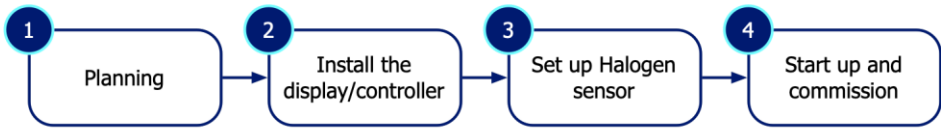

1. **Planning:** Unbox and inspect the box content and gather tools necessary for installation. Make sure the site is ready for product mounting.
2. **Install the display/controller:** Mount the D20 display/controller.
3. **Set up Halogen sensor:** Make sure the connections are set up, turn on water flow, and purge air from the flow cell. A typical installation consists of the flow cell version of the sensor and the 120VAC display/controller. (To learn about other installations, visit the Halogen website.)
4. **Start up and commission:** Connect the MP-Total sensor and connect it to the controller. Power on the controller and check the parameters on the display against a colorimeter and a pH meter. If calibration is required, calibrate pH first and then Chlorine.

Copyright © 2023-2024 Halogen Systems, Inc. All rights reserved worldwide.

Installation Instructions

Step 1: Planning

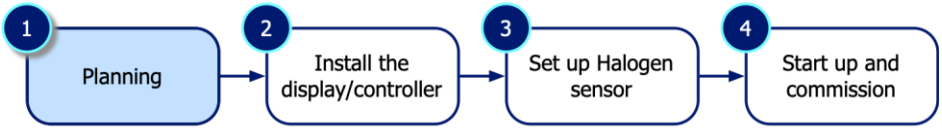

To plan for D20 and MP-Total installation, become acquainted with the following:

- Power and connectivity at the site of the installation
- Know what is in the product boxes
- Identify the tools necessary to bring onsite for the installation

AVAILABILITY OF SERVICES AT THE SITE

There are several critical site services that need to be confirmed by the installer:

1. **Power:** For 120VAC operation, you will need a 120VAC (NEMA5) receptacle to plug in the controller. For 240VAC, you must remove the power cable and install the appropriate conduit and fittings (½" trade size conduit fitting).
   The maximum power rating should be correct for the location's ambient temperature.

   Note: Ambient temperature rating refers to the relationship between the label power rating, the application ambient operating temperature, and the actual power capacity after required derating if necessary.

2. **Communication:** For 4-20mA operation, use 8-conductor 22 AWG cabling.
3. **Mount:** The controller should be installed where the power disconnect device for the controller is easily accessible. A minimum of 6.3 in (16 cm) of clearance is required for the controller door to open.
4. **Orientation:** The controller should be installed upright and level to a panel or vertical/horizontal pole.
5. **Site safety:** There must be sufficient clearance around the installation to make connections and to perform maintenance tasks. The installation must be in a location with minimal vibration.

Warning: Externally connected equipment must have an applicable country safety standard assessment.

Explosion hazard: This manual is only for installation of the unit in a non-hazardous location. Use only the instructions and approved control drawing provided in the hazardous location installation manual for installation in hazardous locations.

If you have any questions, contact your Halogen representative.

Copyright © 2023-2024 Halogen Systems, Inc. All rights reserved worldwide.

WHAT'S IN THE BOX

Open the two boxes to show the MP-Total sensor and the D20 display/controller:

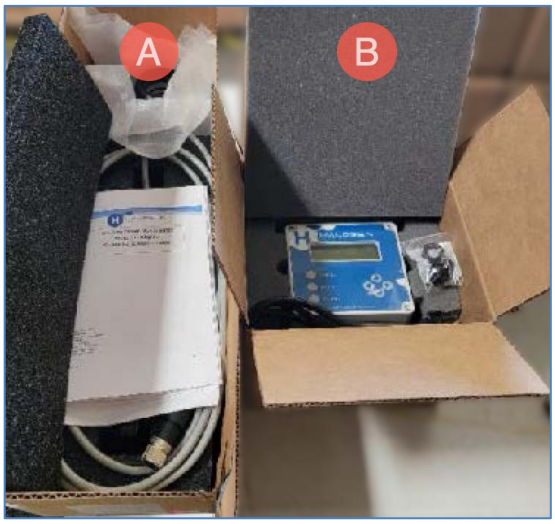

Item	Description
A	MP-Total sensor
B	D20 display/controller

Note: product technical details be found in the technical specifications at the end of this guide.

Unpack the cardboard box protection liners and carefully remove its contents. The boxes should contain the following items:

D20 display/controller	MP-Total sensor
▪ D20 display/controller ▪ Mounting tabs for wall mount ▪ Strain relief for 4-20mA cable ▪ This installation guide	▪ MP-Total sensor for FC installation ▪ Flow cell with push-to-connect tubing fittings ▪ 1/4" tubing (push-to-connect) adapters

If in the unlikely event that something is missing, contact Halogen Systems before proceeding with the installation.

WHAT YOU'LL NEED

You'll need these tools and materials to install the display/controller and the sensor:

- #2 Phillips and flathead screwdrivers
- Screws that are appropriate for mounting the products on a wall or pipe

Depending on how the products will be installed, you may need other tools not described in this guide.

Before proceeding to the next step …

6. Put away the empty boxes and packing material for safe keeping.
7. Determine the best, safest location for mounting the display/controller.
8. Gather all the tools you'll need for the site installation.
9. Don't forget to use our checklist to check off tasks during installation.

Copyright © 2023-2024 Halogen Systems, Inc. All rights reserved worldwide.

Step 2: Install the D20 display/controller

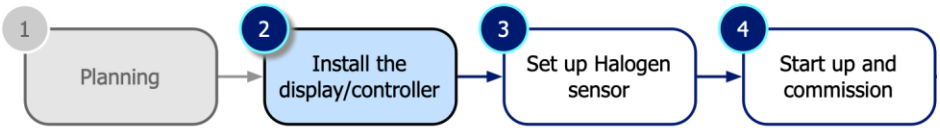

To perform D20 installation, you will:

- Mount the enclosure to a wall
- Mount the D20 to a pole
- Configure the electrical connectors and fittings
- Connect the 4-20mA cabling

MOUNT THE ENCLOSURE

Place the D20 on a flat surface, like a workbench. The maximum area needed for the D20 enclosure and the opened front cover is shown below:

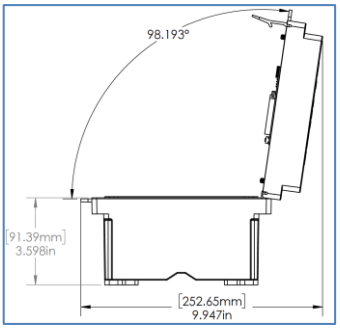

There are two ways to install (mount) the D20 at the site:

- Mount to a wall or
- Mount to a pole

TO MOUNT THE D20 TO A WALL

With the cover closed, carefully place the D20 on a flat work surface exposing the back of the enclosure.

1. Depending on the wall surface, you can align the mounting tabs vertically (L) or horizontally (R). Remove the four screws that secure the mounting tabs, reorient the tabs, and reattach the tabs onto the D20's base.

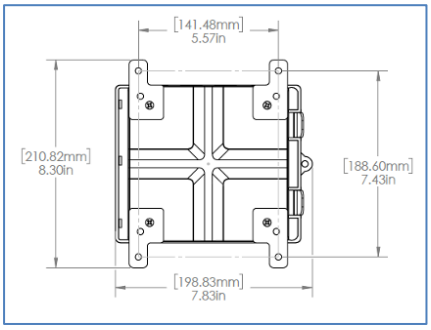

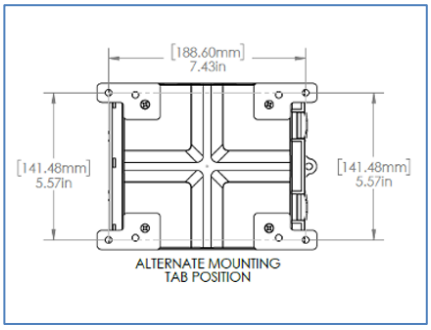

Copyright © 2023-2024 Halogen Systems, Inc. All rights reserved worldwide.

2. Attach the enclosure to the wall with the appropriate wall-mounting screws (not included) that will firmly hold the enclosure to the wall. Make sure that all four corner mounting tabs are attached.

TO MOUNT THE D20 TO A POLE

Similar to the instructions for mounting the D20 to a wall, attach the controller upright to a pole or pipe with a diameter between 19 to 65 mm (0.75 to 2.5 in) that has either a vertical (L) or horizontal (R) orientation:

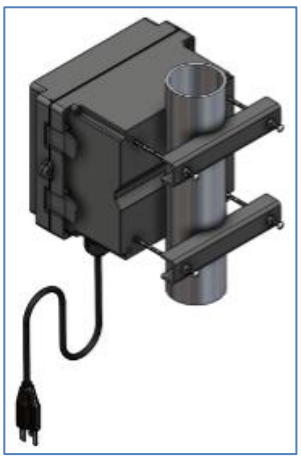

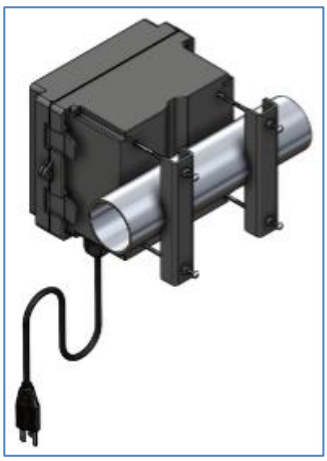

CONNECT ELECTRICAL CONNECTORS AND FITTINGS

At the bottom of the D20 enclosure are the electrical connectors and fittings for the instrument. To maintain the enclosure's environmental rating, ensure the following:

- Strain relief must have an electrical cable that is within its specified diameter range.
- Hole plugs should remain installed onto any unused connectors.

While the D20 controller doesn't require "hard wiring" of connectors, it offers the following connection options:

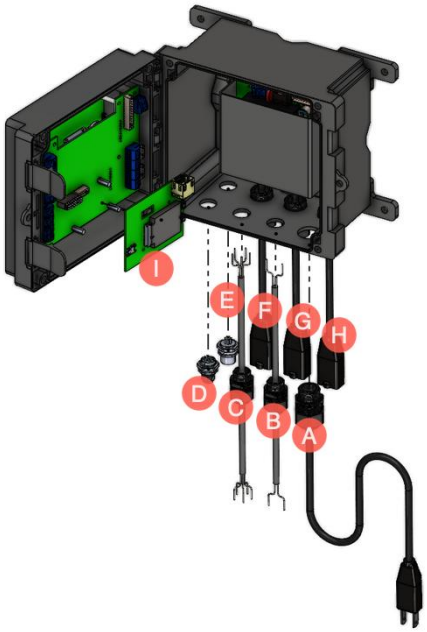

A	120V power*
B	2P conductor wire for alarm (optional)
C	5P conductor wire for liquid and flow sensor (optional)
D	M12 4P connector for Halogen MP5 sensor
E	8P 4-20mA connection (optional)
F	120V power output for controlling pumps* (optional)
G	120V power output for controlling pumps* (optional)
H	120V power output for controlling pumps* (optional)
I	Communications board (BLE and cellular)

*240V available with 1/2" conduit

Copyright © 2023-2024 Halogen Systems, Inc. All rights reserved worldwide.

Warning: Do not plug in the power cable to a power outlet yet!

To gain access to wiring connections, open the controller by unscrewing the four screws on the cover (L) and pull open both latches on the cover (R):

CONNECT THE 4-20MA WIRING

Connect the 4-20mA wiring with an 8-conductor 24AWG cabling (0.21" OD) on the terminal block (in the lower-right corner of the motherboard) using the wiring diagram:

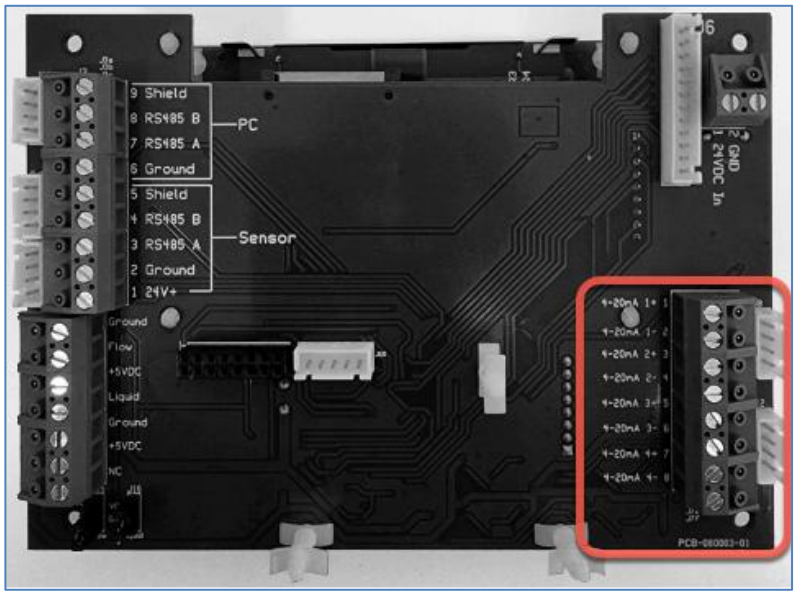

Output Channel	Default Parameter
1+	Mono (ppm)
1-	
2+	Conductivity (uS/cm)
2-	
3+	Temperature (°C)
3-	
4+	pH
4-	

The channel parameter(s) are configurable, refer to "Configuring Communication" to configure the parameter of an output channel

Note: The 4-20mA connection is *not* loop powered. The D20 4-20 mA output is an active output.

Copyright © 2023-2024 Halogen Systems, Inc. All rights reserved worldwide.

Step 3: Set up the Halogen Sensor

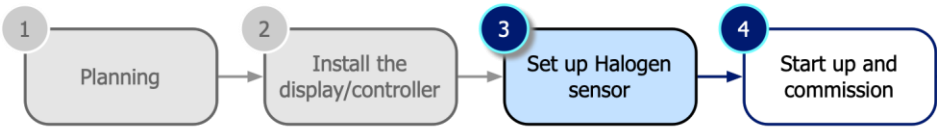

USING THE HALOGEN SIDE STREAM SENSOR

A typical installation consists of the flow cell version of the sensor and the 120VAC display/controller. (To learn about other installations, visit the Halogen website.)

The *Halogen side stream sensor* is a compact device that connects to a drinking water source using ¼" tubing. It requires very little flow and is unaffected by changes in the flow rate; however, long tubing may delay readings. The sensor is enclosed in a clear acrylic flow cell designed to purge air. The inlet pressure should be limited to 60 PSI. The flow rate can be from 0.1 LPM to 1.0 LPM.

The sensor is usually connected to a potable water line, as shown below:

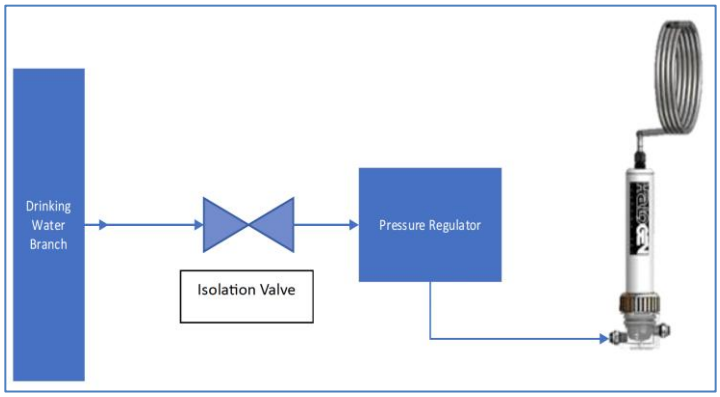

The pressure-reducing valve is needed if the supply water line pressure exceeds 60 PSI/4 Bar. The flow cell is equipped with ¼" *John Guest push-to-connect* (PTC) fittings on both the inlet and the outlet. A short length of tubing is supplied for each connector.

Copyright © 2023-2024 Halogen Systems, Inc. All rights reserved worldwide.

TO INSTALL THE BACKPLATE

The sensor is shipped dry, and once installed and water flow has been established, the pH portion of the sensor will become wet and stabilize, producing accurate readings within 5 minutes. To prepare the Chlorine sensor for operation, do the following:

1. Mount the backplate on a vertical surface, orient the backplate vertically near the process to allow tubing. Secure using #10 self-tapping screws
2. Connect Tubing to the flow cell, position the supplied ball valve at the outlet, close the valve slightly to restrict flow to purge air.
3. Insert the sensor into the acrylic flow cell (the outlet port of the sensor must face up near the outlet of the flow cell).
4. Seat the sensor firmly (as far as it will go).
5. Hand-tighten the collar thread downward until it stops. Do not force.

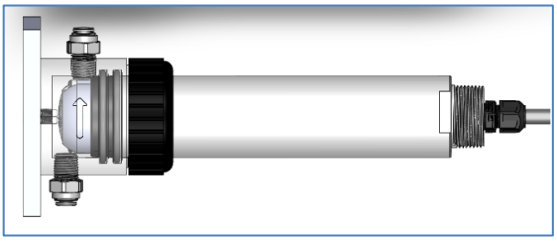

CONNECT DEVICES TO THE M12 CONNECTOR

Connect all digital devices (e.g., sensors and analyzers) to the device connectors on the D20 (see "Connect electrical connectors and fittings"). Keep the unused device connector caps for future use.

Note: Make sure that service cables do not cause a trip hazard, are too tight, or have sharp bends.

Step 4: Start up and commission

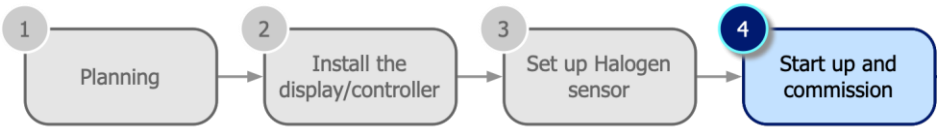

To start up and commission the system, do the following:

- Power up the D20
- Monitor the D20 start-up on the display
- Establish the time of day
- Configure communication

APPLY POWER TO THE D20

Before starting up the display/controller, ensure adequate flow through the flow cell. Plug the D20 power cable into a power outlet.

Copyright © 2023-2024 Halogen Systems, Inc. All rights reserved worldwide.

MONITOR THE D20 START-UP PROCESS

On the display panel, press on the buttons below the display window to select and enter values on the D20:

As the D20 powers up, the display shows a series of status messages like the following:

When the D20 power-up is completed, the sensor will start its start-up sequence (L). Once completed, all pertinent sensor information is displayed (R):

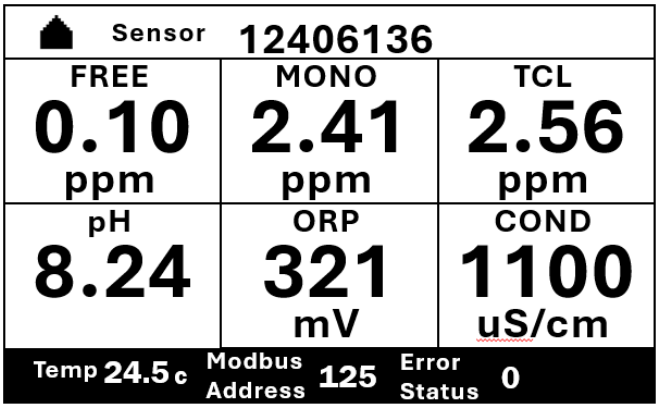

Verify all sensor values displayed on the D20. If pH requires calibration, perform pH calibration (

Copyright © 2023-2024 Halogen Systems, Inc. All rights reserved worldwide.

Reference Calibrations) before continuing. Then check the chlorine and/or monochloramine level using a Hach SL1000 or colorimeter. Adjust the calibration as needed (**Error! Reference source not found.**).

Copyright © 2023-2024 Halogen Systems, Inc. All rights reserved worldwide.

CONFIGURE EXTERNAL COMMUNICATION

The final installation task is communication setup and configuration. Use the arrow keys on the D20 to select menu options (the Enter button accepts the change and the Back button exits the menu screen).

To set up a 4-20mA communication connection to a PLC:

1. Select CONFIGURATION on the D20 display/controller panel and choose 4-20 mA OPTIONS.
2. Go to SELECT OUTPUT CHANNELS.
3. Select OUT1 (or any of the four channels).

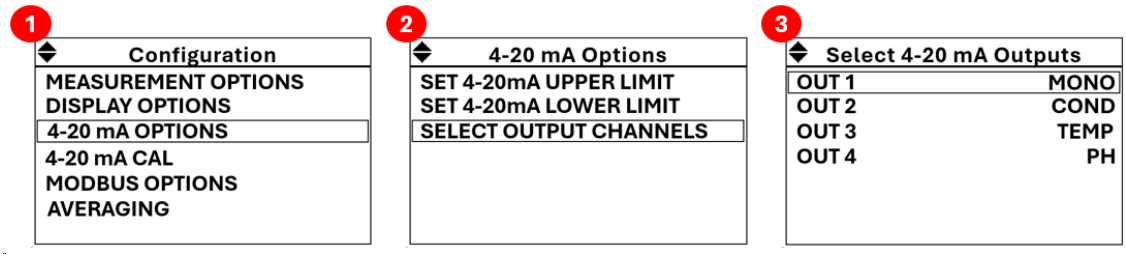

To set the scaling limits between the PLC and the D20:

1. In the **4-20mA Options** menu, select and change the values for **Set 4-20mA Upper Limit**.
2. Back out to the **4-20mA Options** menu, select and change the values for **Set 4-20mA Lower Limit**.

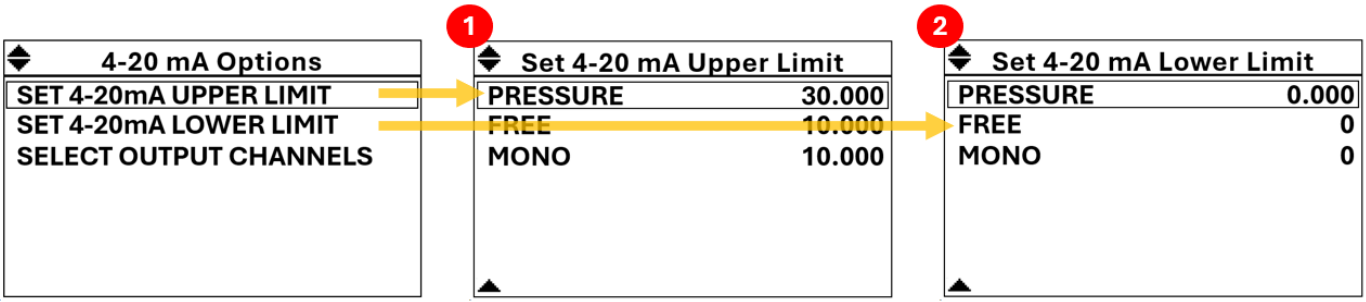

(Optional) To calibrate the outputs:

The 4-20mA outputs on the D20 are already calibrated at the factory. If the settings do not match those on your PLC, select **4-20 mA CAL** option from the **Configuration** menu to recalibrate the channel, 4mA, and 20mA values:

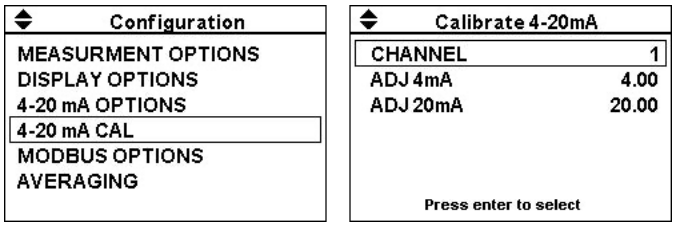

Copyright © 2023-2024 Halogen Systems, Inc. All rights reserved worldwide.

Installation Checklist

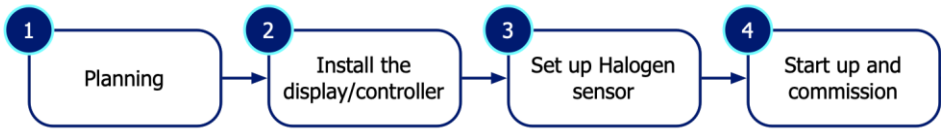

Done	Task
Step 1: Planning	
☐	Make sure power and connectivity services are available at the site
☐	Confirm that everything is included in the box
☐	Gather the tools necessary for the installation
Step 2: Install the D20 display/controller	
☐	Mount the enclosure to a wall or to a pole
☐	Configure the electrical connectors and fittings
☐	Connect the 4-20mA cabling
Step 3: Set up Halogen sensor	
☐	Learn how the Halogen side stream sensor works
☐	Install the flow cell (it must be vertically oriented)
☐	Connect devices to the M12 connector
☐	Allow sensor to warm up for at least 20 minutes
☐	Confirm sensor operation, calibrate chlorine and monochloramine as needed
Step 4: Start up and commission	
☐	Power up the D20 display/controller
☐	Monitor the D20 start-up status on its display panel
☐	Set the time of day
☐	Configure communication

Copyright © 2023-2024 Halogen Systems, Inc. All rights reserved worldwide.

Operation Instructions

Meaning of Indicators

Indicator	Description	Importance
FREE (Free Chlorine)	This indicator shows the concentration of free chlorine in the water, measured in parts per million (ppm).	Monitoring free chlorine levels is essential for maintaining disinfection effectiveness and ensuring water safety. This indicator should match any digital or analog ppm value transmitted by the D20.
MONO (Monochloramine)	Monochloramine is a disinfectant formed by combining chlorine and ammonia. It is measured in parts per million (ppm).	Monitoring monochloramine levels is crucial for ensuring proper disinfection in systems that use this method. It provides longer-lasting disinfection than free chlorine and can help reduce the formation of certain disinfection byproducts.
TOTAL (Total Chlorine)	Total Chlorine refers to the combined concentration of all chlorine-based disinfectants present in water, including free chlorine and combined chlorine (e.g. chloramines). This is measured in parts per million (ppm).	Monitoring total chlorine validates overall disinfection levels that confirms the combined presence of free chlorine and monochloramine. It helps the user quickly identify if the system is not under- or over-chlorination.
pH (Acidity/Alkalinity)	This parameter measures the relative acidity or alkalinity of the water. pH scales from 0 to 14, with 7 being neutral.	The pH level affects chlorine efficacy and the overall balance of water chemistry.
ORP (Oxidation Reduction Potential)	ORP stands for Oxidation Reduction Potential, indicating the water's ability to oxidize contaminants. It is measured in millivolts (mV).	ORP has a logarithmic relationship to Total Residual Oxidants (TRO) and is used for qualitative comparison. A higher ORP value suggests more effective disinfection and oxidation processes, helping to kill organisms and maintain water quality. *Halogen ORP readings in MP5A and MP-Total will not match discrete ORP sensors in some conditions.*
Temp (Temperature)	This indicator shows the water temperature, which can be displayed in degrees Celsius (°C) or	Temperature influences chemical reactions, including chlorine efficacy and sensor performance.

Copyright © 2023-2024 Halogen Systems, Inc. All rights reserved worldwide.

	Fahrenheit (°F), including below-zero values.	
CND (Conductivity)	Conductivity, the default setting, measures the water's ability to pass an electrical current, expressed in microsiemens per centimeter (µS/cm).	Conductivity indicates the ion concentration in the water, which can impact corrosion rates and water chemistry balance.

Calibrating Chlorine Measurement

In process chlorine calibration is an important part of optimizing Halogen Chlorine Analyzer performance. We recommend that calibration be checked or completed as follows:

1. Calibration check upon initial installation and normal process conditions.
2. Check calibration at least every six months.
3. If the value deviates by more than 10% then recalibrate sensor. Since there is some variation in grab sample measurements, we suggest no action unless the deviation is 10%.

All chlorine calibrations can be found in the **Calibrations** menu in the mobile app.

Note: All calibrations should only be completed after the sensor has been running in water for at least 20 minutes.

FAST VS DELAYED CHLORINE CALIBRATION

There are two methods for calibrating chlorine measurements: fast calibration and delayed calibration. Each method is suited for different conditions.

FAST CHLORINE CALIBRATION

Fast chlorine calibration utilizes the most recent sensor chlorine measurement once the chlorine DPD (N,N-diethyl-p-phenylenediamine) value is input. This method is ideal for systems with stable chlorine levels and consistent water conditions.

PROCEDURE:

1. Measure the chlorine level using the DPD method.
2. In the app, Navigate to the **`Calibrations`** menu and select **`Fast Chlorine Cal.`**
3. Input the DPD value and press **`Calibrate.`**
4. The sensor will use the latest chlorine measurement for calibration.

USE CASE:

- Best suited for environments where chlorine levels and water conditions do not fluctuate significantly.

DELAYED CHLORINE CALIBRATION

Delayed chlorine calibration involves holding the sensor's chlorine measurement at the moment the "take sample" command is initiated. This captured measurement is then used to calculate the new calibration value. The sensor readings are maintained for 10 minutes, providing ample time to collect a water sample and complete the DPD reaction.

PROCEDURE:

1. In the app, Navigate to the Calibrations menu and select **`Delayed Chlorine Cal`** .
2. Select **`Take Sample.`**

Copyright © 2023-2024 Halogen Systems, Inc. All rights reserved worldwide.

3. Collect a water sample within 20 minutes.
4. Perform the DPD test on the sample.
5. Input the DPD value and press **`Calibrate.`**
6. The sensor will use the held measurement to adjust the calibration.

USE CASE:

- Suitable for systems with fluctuating chlorine levels or where the DPD test requires several minutes to complete.

Note: If chlorine levels are changing rapidly (within less than one minute between concentration changes), it is not advisable to calibrate the sensor while installed in the system. In such cases, grab samples are unreliable for reflecting the sensor's measurements accurately at any given moment.

TOGGLING CHLORINE CONFIGURATION

`NAVIGATION: MENU | CONFIGURATION | MEASUREMENT OPTIONS | CHLORINE CONFIGURATION`

USE CASE: Toggle “Total, Free” to calibrate when treated water has only free chlorine species present. Monochloramine is an interferent to the free chlorine DPD process.

USE CASE: Toggle “Total, Mono” or “Mono” if monochloramine is the only chlorine species present in the system.

If pH is always above 9.3, Halogen Systems recommends the user to select "Mono, Total” or “Mono.” Free chlorine measurements become unstable when the pH is above 9.3. Removing Free chlorine shortens the measurement cycle time to <50 seconds.

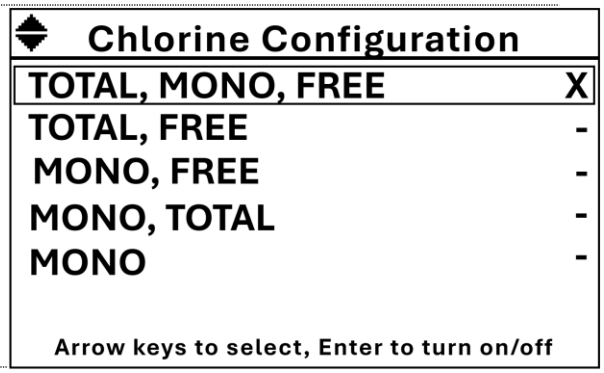

FAST CHLORINE CALIBRATION

USE CASE: Use this method to calibrate when treated water has both monochloramine and free chlorine species present.

To calibrate monochloramine, free, and total chlorine levels simultaneously, follow these steps using a reliable reference method, such as a Hach SL1000 with monochloramine, free, and total chlorine Chemkeys. This approach allows for parallel readings, enabling faster calibration.

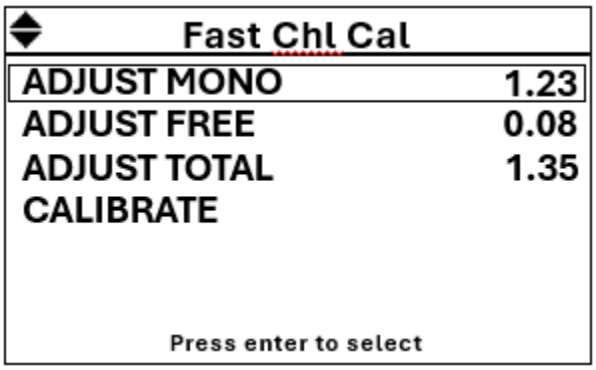

Procedure:

1. Navigation:
   - Press **`'MENU'`**
   - Select **`'Calibrate'`**
   - Choose **`'Chlorine'`**
   - Select **`'Fast CHL Cal' or 'Delayed Chl Cal'`**
2. Measurement:

Copyright © 2023-2024 Halogen Systems, Inc. All rights reserved worldwide.

- Use the Hach SL1000 to measure monochloramine, free chlorine, total chlorine and ammonia levels.

3. Analysis:
   - Since the analysis can take up to 9 minutes, employ the Delayed Chlorine Calibration method. This method captures the signal level at the time the sample is taken, ensuring the calibration reflects the conditions at the sampling moment.
   - Use the Fast Cal method if reference values are stable.
4. Input:
   - Adjust **'Free' | 'Mono' | 'Total'** values to match the values obtained from the reference analysis.
   - Select **'Calibrate'.**
   - Values will update with the new calibration within 5 minutes.

Key Points:

- **Timing:** The delayed calibration method is crucial due to the time required for the analysis, ensuring calibration is based on the sample's condition at the time of collection.
- **Excess Ammonia:** If there is excess ammonia present and the sensor displays a free chlorine value greater than 0.00 ppm, a Free Zero calibration should be performed.
- **pH:** If pH is always above 9.3, Halogen Systems recommends the user to select "Mono, Total" or "Mono." Free chlorine measurements become unstable when the pH is above 9.3. Removing Free chlorine shortens the measurement cycle time to <50 seconds. See Configuration section for instructions.

FREE CHLORINE CALIBRATION

USE CASE: Use this method to calibrate when treated water has only free chlorine species present. Monochloramine is an interferent to the free chlorine DPD process.

The best time to calibrate free chlorine is during a free chlorine burn, when a stable chlorine value has already been measured. Follow these steps for fast free chlorine calibration:

Fast Free Chlorine Calibration Procedure:

1. Measure Chlorine Level:
   - Use the DPD method to determine the current free chlorine level.
2. Calibrate the System:
   - Navigate through the menu to perform the calibration:
     - Go to **'MENU'**
     - Select **'Calibration'**
     - Choose **'Chlorine'**
     - **Choose 'Other'**
     - **Choose 'Fast Free Chlorine'**
     - **Input DPD Value**
     - Press **'Select'** to save.

Delayed Free Chlorine Calibration Procedure

1. Navigate the Menu:
   - Go to **'MENU'**
   - Select **'Calibration'**
   - **Choose 'Other'**
     - **Choose 'Delayed Free Chlorine'**

Copyright © 2023-2024 Halogen Systems, Inc. All rights reserved worldwide.

- **Input DPD Value**
- Press **'Select'** to save.

2. Perform the Calibration:
   - Take grab sample from a representative sample location
   - Use the DPD method to determine the current free chlorine level
   - Input the DPD Level
   - Press **'Select'** to save.

CALIBRATE ZERO FREE CHLORINE

NAVIGATION: MENU | CALIBRATE | CHLORINE | FREE ZERO CALIBRATION

Calibrating the free chlorine is a straightforward process that can be executed through the Display Transmitter. This automatic calibration entails the sensor determining an offset based on its signal when the calibration initiates. To ensure precision, follow these steps in water free of chlorine residuals:

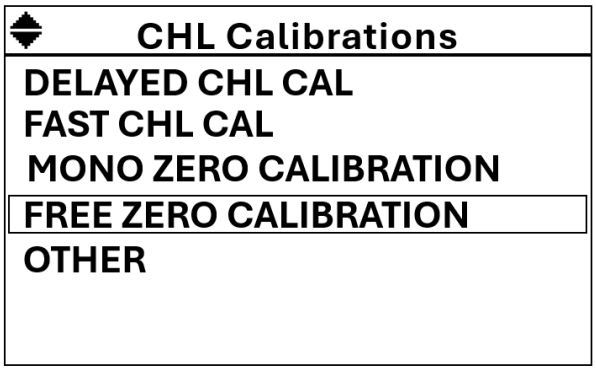

Note: Use process water with excess ammonia present for a zero free chlorine calibration. DO NOT USE DISTILLED WATER.

- Go to **'MENU'**
- Select **'Calibration'**
- Choose **'Chlorine'**
- Choose **'Free Zero Calibration'**
- Choose **'Yes'** if sensor is in zero free chlorine

Note: Chlorine zero calibration should only be initiated when the sensor reports lower than 0.06. Residuals may cause sensors to read up to 0.06 ppm of free chlorine. Utilize another measurement method to verify the water conditions.

Copyright © 2023-2024 Halogen Systems, Inc. All rights reserved worldwide.

Reference Calibrations

Reference Calibration	
CONDUCTIVITY CALIBRATION	1. Navigate to the **Calibrate** menu. 2. Enter the **Conductivity** Menu. 3. Input the known conductivity value. 4. Press **Select** to save.
TEMPERATURE CALIBRATION	1. Navigate to the **Calibrate** menu. 2. Enter the T**emperature** menu. 3. Input the known temperature value. 4. Press **Select** to save.
SINGLE POINT PH CALIBRATION (Known Value)	1. Navigate to the **Calibrate** menu. 2. Enter the **pH** menu. 3. Select **Single Point pH Cal**. 4. Input known pH value. 5. Press **Select** to save.
2-POINT BUFFER CALIBRATION (AUTO BUFFER DETECTION)	6. Select **2-point auto buffer cal**. 7. Note: 2-point will autodetect 7 and 10 buffer. 8. Rinse sensor and place in first buffer. 9. Press **Enter** to start process- sensor motor will turn on and off when the pH is stable. 10. Move to rinse water. 11. Select **Finish** or **Continue Buff 7/10** to proceed with next buffer. 12. If **Finish** is selected, calibration will terminate and return to measurement screen. 13. Move to the next buffer and allow sensor to run in liquid for approx. 1 minute before clicking **Next Buffer**. 14. Measurement screen will appear after calibration is completed successfully.
ENTERING A FIXED PH VALUE	1. If your pH does not change, you can select a fixed pH that the sensor will use for pH compensation. Enable this in **MENU | CONFIGURATION | MEASUREMENT SETTINGS |PH FIXED.** 2. The manual pH level to be used is entered in the **Fixed pH** screen.
ORP CALIBRATION	1. Navigate to the **Calibrate** Menu. 2. Enter the ORP Menu. 3. Input the Known ORP Value 4. Press Select to save.

Copyright © 2023-2024 Halogen Systems, Inc. All rights reserved worldwide.

Restoring Factory Calibrations

If the sensor settings and calibrations have been modified and the sensor is not measuring correctly or has persistent error codes that cannot be resolved, restoring the factory default calibrations may help resolve the issue.

Note: Restoring the calibration to factory defaults may require you to re-calibrate the sensor for chlorine to ensure accurate measurements.

Steps to Restore Default Calibrations:

1. Navigate to the main menu:
   - Press the **MENU** button.
2. Access the calibration options:
   - Select **Calibrate** from the menu options.
3. Restore to factory defaults:
   - Choose **CALIBRATION DEFAULTS**.
4. Complete the operation:
   - The sensor will automatically restart to complete the restoration process.

By following these steps, you can restore the sensor to its original factory settings and calibrations, which may resolve measurement inaccuracies and persistent error codes.

Configuration

MEASUREMENT OPTIONS

Disabling Measurements

Certain measurements, such as ORP or pH, can be disabled in the measurement sequence. Disabling ORP will reduce the measurement time by 5 to 10 seconds. ***By default, ORP measurement is disabled.***

Steps to Turn Off ORP, Free chlorine or pH Measurements:

Navigate to the menu:

- Press **MENU.**

Access configuration options:

- Select **Configuration.**

Modify measurement options:

- Choose **Measurement Options**.
- Toggle the desired measurement (**ORP, MONO ONLY** or **pH**) to "**Off**" by following the on-screen prompts.

Copyright © 2023-2024 Halogen Systems, Inc. All rights reserved worldwide.

- If pH is always above 9.3, Free chlorine measurement may be deselected to only measure monochloramine. MONO ONLY will shorten the measurement time to less than 50 seconds.
- '**x**' is enabled.

Enabling Intermittent Measurement

Intermittent measurements can be configured to optimize power usage. This mode measures twice and then shuts down the sensor, activating the motor only during the last 10 seconds of measurement. This option is suitable for setups where the sensor is directly connected to an external data logger without a display.

Steps to Enable Intermittent Measurements:

1. Navigate to the menu:
   - Press **MENU**.
2. Access configuration options:
   - Select **Configuration**.
3. Modify measurement options:
   - Choose **Measurement Options**.
   - Navigate to **Intermittent**.
   - Replace the "**-**" with an "**x**" to enable intermittent measurements.

Note: Intermittent measurements should only be used when the sensor is directly connected to an external data logger and no display is present.

Manually Entering a Fixed pH Value

This setting allows the sensor to use a manually entered pH value instead of measuring the actual pH. This is useful if your pH remains constant, and you prefer to use a fixed pH value for compensation.

Steps to Enable and Enter a Fixed pH Value:

1. Navigate to the menu:
   - Press **MENU.**
2. Access configuration options:
   - Select **Configuration.**
3. Modify measurement settings:
   - Choose **Measurement Settings**.
   - Select **pH Fixed**.
4. Enter the manual pH value:
   - In the **pH Fixed** screen, enter the desired pH value to be used for pH compensation.

DISPLAY OPTIONS

This section defines the various options for visual display of information on the Display Module within the **Display Options** menu:

Copyright © 2023-2024 Halogen Systems, Inc. All rights reserved worldwide.

- **3 Decimals:**
  - **Description:** Displays the chlorine value with three decimal places.
  - **Usage:** Provides a more precise chlorine reading.
- **TEMP IN FAHRENHEIT:**
  - **Description:** Toggles the temperature display between Celsius (°C) and Fahrenheit (°F).
  - **Usage:** Choose your preferred temperature unit for display.
- **BACKLIGHT:**
  - **Description:** Turns the LCD backlight on or off.
  - **Usage:** Useful for power savings, especially when the system is connected to a solar panel.
- **KEYCODE:**
  - **Description:** When enabled, requires an operator to enter a specific string of key presses to allow calibration.
  - **Usage:** Adds a security measure to prevent unauthorized calibration.
- **Home Type:**
  - **Description:** Adjusts the display layout to make the Chlorine reading larger than other readings.
  - **Usage:** Enhances readability of the Chlorine value for quick reference.

By configuring these display options, you can customize the visual output to better suit your operational needs and preferences.

4-20 MA CONFIGURATION

Defining 4-20 mA Outputs

The 4-20 mA output channels can be customized to output any of the available measurement parameters. Follow the steps below to configure the outputs:

Steps to Define 4-20 mA Output Channels:

1. Navigate to the menu:
   - Press **MENU**.
2. Access configuration options:
   - Select **Configuration**.
3. Enter **4-20 mA OUTPUT SETUP**
4. Define output channels:
   - Choose **Define Output Channels**.
5. Assign measurement parameters to each channel as needed.

Default Channel Output Assignments:

- **Out 1:** Chlorine
- **Out 2:** Conductivity
- **Out 3:** Temperature (°C)
- **Out 4:** pH

Copyright © 2023-2024 Halogen Systems, Inc. All rights reserved worldwide.

By following these steps, you can configure the 4-20 mA output channels to suit your specific monitoring needs, ensuring that the most relevant parameters are available for external systems and logging.

Configuring 4 – 20 mA Upper Limit

The upper limit setting allows you to define the maximum measurement parameter value that corresponds to the 20 mA maximum output. It is important to set this value to match the upper limit value of the PLC to which the display is connected.

Steps to Set the 4-20 mA Upper Limit:

1. Navigate to the menu:
   - Press **MENU**.
2. Access configuration options:
   - Select **Configuration**.
3. Configure the 4-20 mA outputs:
   - Choose **4-20 mA OUTPUT SETUP**.
   - **Set 4-20 mA UPPER LIMIT**.
4. Set the upper limit for each measurement parameter as needed.

Default Upper Limit Settings:

- **Chlorine:** 10 ppm
- **Conductivity:** 65000 µS/cm
- **PSU (Practical Salinity Units):** 50
- **Temperature (°C):** 50
- **pH:** 12
- **ORP (Oxidation Reduction Potential):** 1100 mV
- **Pressure:** 200 psi

Configuring 4 – 20 mA Lower Limit

The lower limit setting allows you to define the minimum measurement parameter value that corresponds to the 4 mA minimum output. It is important to set this value to match the PLC to which the display is connected.

Steps to Set the 4-20 mA Lower Limit:

1. Navigate to the menu:
   - Press **MENU**.
2. Access configuration options:
   - Select **Configuration**.
3. Configure the 4-20 mA outputs:
   - Choose **4-20 mA OUTPUT SETUP**.
   - **Set 4-20 mA LOWER LIMIT**.
4. Set the upper limit for each measurement parameter as needed.

Default Upper Limit Settings:

- **Chlorine:** 0 ppm

Copyright © 2023-2024 Halogen Systems, Inc. All rights reserved worldwide.

- **Conductivity:** 0 µS/cm
- **PSU (Practical Salinity Units):** 0
- **Temperature (°C):** 0
- **pH:** 5
- **ORP (Oxidation Reduction Potential):** 0 mV
- **Pressure:** 20 psi

By setting these limits, you ensure that the measurement parameters are correctly scaled to the 4-20 mA output range, providing accurate and consistent data to the PLC and other connected devices.

Calibrating 4 – 20 mA DAC Output

Digital-to-Analog Converter output can be calibrated to match PLC and Halogen readings.

MODBUS COMMUNICATION OPTIONS

This section outlines the Modbus configuration options available through the menu, enabling smoother communication with a PLC and management of sensor addresses.

MENU SELECTION	DESCRIPTION
SLAVE ADDRESSES	Displays the Modbus addresses of all connected sensors.
CHANGE ADDRESS	Allows you to change the address of a connected sensor. Ensure only one sensor is connected when running this option.
START BUS SEARCH	Searches the bus for all connected sensors (up to 10).
BAUD SETTINGS	The default baud rate is 19,200. Baud rate can be configured in this menu.

These options provide essential tools for configuring and managing the communication between the Chlorine Analyzer and connected PLC systems, ensuring reliable and efficient operation.

AVERAGING MEASUREMENTS

The averaging measurements setting allows you to average a selected number of measurements for each parameter. This can be particularly useful for water quality monitoring and process control, as it helps to smooth out short-term fluctuations and provides a more stable reading.

When to Use Averaging:

- **Water Quality Monitoring:** Averaging measurements can help in obtaining a more accurate representation of water quality over time, reducing the impact of transient spikes or drops.
- **Process Control:** For processes that require stable input data to adjust or control decisions, averaging can provide more consistent data, leading to better control and decision-making.
- **Noise Reduction:** In environments with high levels of measurement noise, averaging can help in minimizing the impact of these disturbances on the measured values.

Default Setting:

- The default setting for averaging is no filter, indicated by a value of “1”.

Configurable Range:

- The averaging value can be set to any integer between 1 and 20.

Menu Navigation: To configure the averaging of measurements, follow these steps:

1. Navigate to **Configuration**:

Copyright © 2023-2024 Halogen Systems, Inc. All rights reserved worldwide.

2. Select **Averaging**:
3. Set the **Averaging Value**:
4. Choose the desired averaging value (between 1 and 20).

SET SYSTEM TIME

To set the system time on your device, follow these steps:

1. Navigate to System Time:
   - **MENU ➔ CONFIGURATION ➔ SYSTEM TIME**
2. Adjust the Time and Date:
   - The cursor will appear below the first digit.
   - Use the arrow keys to select and increment the digit to match the desired date and time.
   - Use the → button to move to the next digit.
   - Use the ↑ and ↓ buttons to change the value of the selected digit.
3. Save the Settings:
   - Press **ENTER** to confirm the changes.
   - Select **SAVE NOW** to save the new date and time settings.

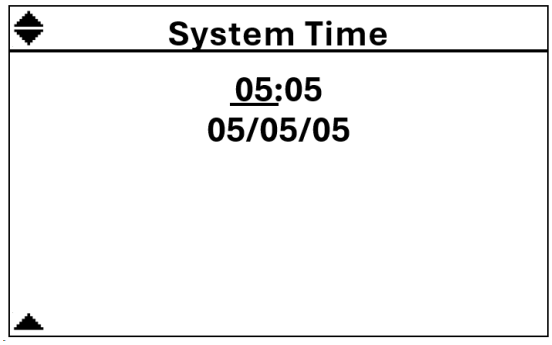

Figure 1: Example Display Screen

Copyright © 2023-2024 Halogen Systems, Inc. All rights reserved worldwide.

Warnings and Error Codes

In the operation of the Chlorine Analyzer, the system provides vital feedback in the form of warnings and error codes. These warnings and codes are reported by the sensor when specific conditions or situations arise, such as out-of-range calibrations or the sensor operating without water. It is essential to understand and address these error codes promptly to maintain accurate and reliable measurements.

These warnings and error codes are categorized into three types:

Type	Description
Warnings	Indicated by an exclamation point (!) in the upper right corner of the display. A warning indicates that a measurement is out of tolerance, or a maintenance task is upcoming. Warning messages can be viewed by pressing the down arrow on the main window. Pressing select on the warning message will display the warning description.
Level 1 Error Codes	Displayed on the display transmitter. These errors may impact accuracy of measurements if left uncorrected.
Level 2 Error Codes	These types of faults, detected by the system, stop the cycle pending removal or correction of the condition. These errors will generate an alarm condition that will cause the Display to flash the backlight and the 4-20 mA output to go negative (≤ 3.8 mA output).

WARNINGS (!)

Message	Cause	Corrective Action	Effect on System
Chlorine Zero	Chlorine zero calibration is out of range.	Use 'Restore to Factory Defaults' command then retry. If unsuccessful, manually set chlorine zero.	Chlorine measurements at low concentrations may be inaccurate until warning is cleared.
Chlorine Slope	Chlorine slope calibration out of tolerance.	Use 'Restore to Factory Defaults' command to clear errors. Confirm reference chlorine value and retry calibration. If still unsuccessful, clean sensor electrode per product guide.	Chlorine measurement may not be accurate across entire operation range.
pH Calibration Slope	Two-point pH slope calibration out of tolerance. pH sensor may require replacement.	Use 'Restore to Factory Defaults' command and attempt buffer recalibration. Replace the pH sensor if recalibration fails.	pH measurements may not be representative of water conditions. If pH measurement erratic, chlorine measurement will be affected.
pH Calibration Offset	Single point or 7 pH buffer calibration out of tolerance. pH	Use 'Restore to Factory Defaults' command and attempt 7 buffer recalibration. Replace the pH sensor if recalibration fails.	pH measurements may not be representative of water conditions. If

Copyright © 2023-2024 Halogen Systems, Inc. All rights reserved worldwide.

	sensor may require replacement.		pH measurement erratic, chlorine measurement will be affected.
Replace Wear Parts	Triggered after sensor has been running for 8040 hours. Wear parts must be replaced within specified number of days.	Replace wear parts and reset wear part countdown timer.	Sensor cleaning and mechanical performance are approaching sub optimal conditions. Chlorine and reference measurements may be adversely affected.

LEVEL 1 ERROR CODES

Error Code	Meaning	Cause	Corrective Action	Effect on System
1	Air in Sensor (10 cycles)	Like Error 31 but occurs for 10 cycles	Power the sensor on and off several times or send clear error command. Ensure the sensor is immersed in water. Check the installation to ensure the outlet port is vertical or perpendicular to flow (ballast pipe). Check the orientation, which should be mounted at 90° to 270°. Perform Function Test.	Measurements will be inaccurate and/or erratic. Errors will clear automatically when trigger condition is cleared.
31	Air in Sensor	Air is trapped inside the sensor	The sensor will enter a priming function to remove the air. The error will clear automatically when the condition is corrected. If error will not clear, confirm the sensor is immersed in water. Then, power cycle system or send clear error command. If error persists, perform Function Test.	Erratic chlorine measurement. Errors will clear automatically when trigger condition is cleared.

LEVEL 2 ERROR CODES

Error Code	Meaning	Cause	Corrective Action	Effect on System
33	Motor Stalled	Debris is present in the sensor cover	Power cycle sensor or send clear errors command. Check for debris or impeller binding in the sensor cover and refer to the Wear Parts Replacement instructions for	4 - 20 mA output negative. Erratic or 0 ppm chlorine regardless of water conditions.

Copyright © 2023-2024 Halogen Systems, Inc. All rights reserved worldwide.

			disassembly instructions. Perform Function Test.	
10	Sensor Communication Fault	Sensor not responding or missing, no communications with the temperature sensor board.	Check sensor connections. Initiate Clear Errors Command. Replace sensor with exchange unit.	4 - 20 mA output negative.

WARNING – CHLORINE ZERO OUT OF RANGE

Meaning: Chlorine Zero calibration was completed when the sensors raw signal was outside the acceptable range. This is often a result of completing a chlorine zero calibration when chlorine is still present in the water.

Corrective Action:

1. Use the 'Restore Settings to Factory Defaults' command to clear the error.
2. Recalibrate chlorine zero or manually write chlorine zero (Section 3.2.2).

WARNING – PH OFFSET OUT OF RANGE

Meaning: that pH offset calibration was completed when there was too large a difference between the Halogen Sensor pH mV reading and the attempted pH calibration value. Offset is calibrated via a single point known pH calibration or during pH 7 buffer calibration. This error can also be triggered if the pH measurement is turned off and a pH calibration is attempted. The acceptable offset range is 0 ± 40 mV.

Corrective Action:

Option 1: Recalibrate or replace pH.

1. Use the 'Restore Settings to Factory Defaults' command to clear the error.
2. Confirm that pH measurement is turned on by navigating to MENU | CONFIGURATION | MEASUREMENT OPTIONS.
3. Select 'Do pH' and use the Up and Down arrows to put an X next to 'Do pH'. X indicates that measuring pH is enabled. Press SELECT to save.
4. Place sensor in pH 7 Buffer and monitor pH mV value until it is stable.
5. Determine if mV value is within the acceptable mV range.
6. Attempt 7 Buffer calibration if within range.
7. If outside of range, replace pH sensor or disable pH.

Copyright © 2023-2024 Halogen Systems, Inc. All rights reserved worldwide.

Option 2: Disable pH

1. Use the 'Restore Settings to Factory Defaults' command to clear the error.
2. Navigate to MENU | CONFIGURATION | MEASUREMENT OPTIONS
3. Select 'Do pH' and use the Up and Down arrows to put an '–' next to 'Do pH'. The '—' indicates that measuring pH is disabled.
4. Press SELECT to save.

Note: When pH is turned off, the sensor will continue to report pH at 8.05 (or manually fixed pH value) but no longer measure actual water pH. If the system experiences large swings in pH, the sensor will no longer be compensating for the changes in water pH and accuracy may be affected minimally.

WARNING – PH SLOPE OUT OF RANGE

Meaning: A pH 10 buffer calibration was attempted but there was too large a difference between expected pH mV and actual pH mV. The pH slope was out of range a reverted to the maximum acceptable value. The acceptable pH slope range is -79.7 to -39.7. The expected pH mV value in 10 buffer is approximately -180 mV.

Corrective Action:

1. Use the 'Restore Settings to Factory Defaults' command to clear the error.
2. Place the sensor in pH 10 Buffer and monitor pH mV to determine if the mV value is within 30 mV of -180 mV.
3. If within range, attempt pH 10 buffer calibration.
4. If outside of range, replace the pH sensor.

ERROR 31 – AIR IN SENSOR

Meaning:
Error 31 is triggered when the AUX voltage is out of range. The acceptable range is -1900 to 1900. This error is most observed when the sensor is running without water, or if air becomes trapped inside the sensor end.

Corrective Action:

Step 1: Clear Errors or Restart Sensor

Option 1: Clearing Errors via Display (Recommended)

Without disconnecting power, follow these steps using the display:

1. Activate the Long menu.
2. Navigate to the Diagnostics section.
3. Select "Clear Errors."
4. The sensor will clear any open error codes, and the motor will initiate a self-priming process by alternately changing the impeller's direction three times.

Option 2: Restarting the Sensor via Display

1. Navigate to the Maintenance section.
2. Select "Restart System."
3. The display will power down, and the sensor will restart.
4. Errors will be cleared, and the sensor will self-prime.

Copyright © 2023-2024 Halogen Systems, Inc. All rights reserved worldwide.

Option 3: Clearing Errors via Halogen Software (MP5 Connect)

Using the Halogen Software (MP5 Connect):

1. Navigate to the Diagnostics window.
2. Check the board to confirm errors.
3. Press "Clear Errors."

Option 4: Unplugging and Replugging the Sensor

Unplug the sensor from the power supply and then plug it back in to initiate a sensor restart.

Step 2: Monitor Sensor Function and Data Output

After performing the error-clearing process, monitor the sensor's function and data output:

1. Check if the motor is spinning unimpeded.
2. Observe whether the motor changes direction three times and then starts spinning in one direction normally.
3. Ensure that water is flowing from the outlet port in a constant stream.
4. If, after performing the above steps, the error condition persists and Error 31 cannot be reliably cleared, the chlorine sensor may be defective or damaged. In such rare cases, the sensor will require replacement. See Error 1 for more information.

ERROR 33 – MOTOR ERROR

Meaning:

These errors are triggered by changes in the motor's RPM detected by the sensor's tachometer. The tachometer measures only the revolutions of the internal motor and not those of the impeller. Therefore, it is possible to have a bonded impeller while the motor continues to spin internally.

Corrective Actions:

Step 1: Initiate Clear Error Command

Initiate the clear error command using the following steps:

1. Using the sensor's display or software, navigate to the Diagnostics or Error section.
2. Activate the "Clear Error" command.
3. Observe if the error is cleared and the sensor resumes normal operation.

Step 2: Remove Sensor from the System and Perform Function Test

If the error persists, proceed with the following steps:

1. Remove the sensor from the system as per the specific model type's installation manual.
2. Perform a Function Test on the sensor outside of the process. Ensure that the sensor is adequately powered and communicates during this test.

Step 3: Check Impeller for Free Rotation

1. If the Function Test fails or the impeller does not spin freely when the sensor is powered and communicating, proceed to remove the sensor cover following the Wear Parts Replacement instructions.
2. Power on the sensor and check if the impeller can spin freely when the sensor is powered and communicating.

Step 4: Exchange Sensor with Replacement Unit

1. If the impeller no longer spins or remains stuck, exchange the sensor with a replacement unit as per Halogen Systems' replacement procedures.
2. Contact Halogen Systems for further assistance in obtaining a replacement sensor.

Copyright © 2023-2024 Halogen Systems, Inc. All rights reserved worldwide.

Note: Error 33 and Error 35 are motor-related errors, and their corrective actions are similar. These actions are essential to ensure the sensor's proper functioning and prevent further motor-related issues.

ERROR 1 – PERSISTENT ERROR 31

Meaning: Error 1 is triggered after 10 consecutive cycles with Error 31 occurring.

Corrective Action:

Follow Error 31 corrective action steps. If unable to clear, the chlorine electrode or circuit board may have failed, and the sensor will require replacement.

ERROR 10 – ELECTRONICS FAILURE – TEMPERATURE SENSOR FAILURE

Meaning: Error 10 is a result of a communication problem with the temperature sensor circuit board, specifically Electronically Erasable Programmable Read-only Memory or EEPROM. This is most often the result of communication loss, damage, or fault within the temperature sensor board. This failure can be identified by the temperature measurement getting locked on a single value or the appearance of an unusual temperature such as -300 °C. Other indicators include loss of Serial Number (SN appears as 16553565535), loss of stored calibration values, loss of stored settings, and inaccurate measurement parameters.

Corrective Actions:

1. Power cycle or system restart.
2. Reset calibrations to default.
3. If the above fail, replace with spare analyzer, and contact Technical Support.

Maintenance

WASTEWATER MAINTENANCE

The Halogen MP5 sensor is designed for low maintenance and can be installed in both wastewater and drinking water applications. Due to the absence of a membrane or electrolyte, the maintenance cycle is significantly extended, and routine cleaning tasks are generally unnecessary. The sensor features an integrated cleaning system that uses polymeric beads to clean all electrodes, including the pH sensor cartridge.

Note:
In wastewater applications, some manual cleaning may be required if visible clogging occurs due to biofouling, particularly in immersion installations. While the electrodes typically remain clean, the flow into the sensor can be restricted by clogged or blocked ports.

Copyright © 2023-2024 Halogen Systems, Inc. All rights reserved worldwide.

SENSOR CLEANING

In applications with high iron concentrations or significant biofouling, a buildup can occur on the sensor's end (strainer), which may restrict flow. In such environments, the sensor should be inspected every two weeks. If buildup is detected, clean the sensor using one of the following methods:

Option 1: Potassium Metabisulfite Cleaning

1. Prepare a solution of Potassium Metabisulfite (e.g., LD Carlson 6012A) according to the manufacturer's recommendations.
2. Immerse the sensor in the solution for one minute while the sensor is powered on.
3. After cleaning, rinse the sensor thoroughly.
4. Power off the sensor and return it to service.

Option 2: Vinegar Cleaning

1. Remove the sensor from the process and rinse it to remove any residual chlorine.
2. Select a small container, fill it with 2 inches of tap water, and immerse the sensor.
3. Power on the sensor and gently tap it to remove any trapped air; rinse the sensor.
4. Remove the sensor from the container, empty the container, and refill it with a solution of 1 part vinegar to 9 parts water.
5. Place the sensor back into the container, power it on, and tap lightly to remove air.
6. Run the sensor in the solution for 30 to 60 seconds. Do not leave the sensor in the vinegar solution for more than 60 seconds.
7. Remove the sensor, rinse it thoroughly as in Step 3, and return it to the process.
8. Check the sensor's calibration after cleaning.

Warning:
Always wear appropriate eye and skin protection when handling cleaning agents. Follow all Material Safety Data Sheet (MSDS) recommendations.

Copyright © 2023-2024 Halogen Systems, Inc. All rights reserved worldwide.

ANNUAL MAINTENANCE

Replacing Wear Parts

Kit Contents:

1. Cover Screws (x2)
2. Sensor Cover (x1)
3. Cleaning Beads (x2 packs of 15 ea.)
4. Impeller (x1)
5. Wear Ring (x1)

Assembly Overview:

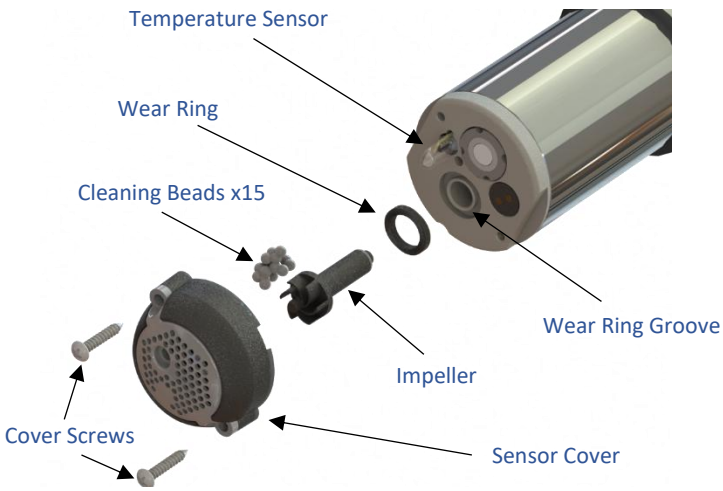

Figure 1: Exploded assembly - bottom view.

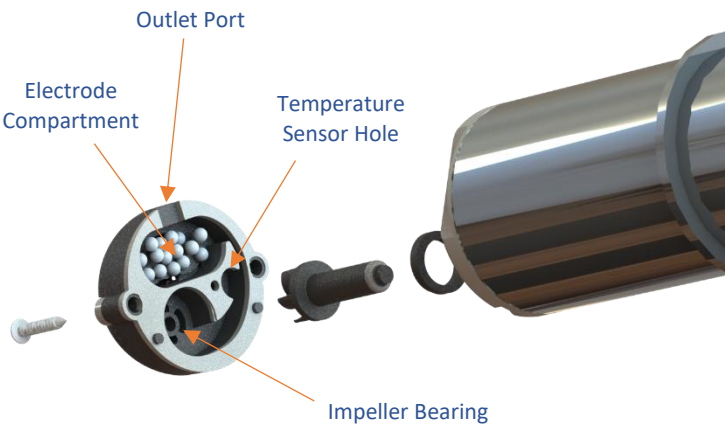

Figure 2: Exploded assembly - correct cleaning bead location.

To remove wear parts: Remove 2x cover screws from the sensor cover. Maintain pressure on the sensor cover and rotate the sensor vertically. Remove the sensor cover and screws from the sensor end while keeping the sensor vertical. Remove the impeller from the impeller well. Impellers are magnetically coupled and should be removed easily. Remove the wear ring. All removed parts can be discarded. If fouling is present, it is permissible to clean the sensor end with Isopropyl Alcohol and lint-free cloth. Take care not to scratch the electrode surface.

To install new wear parts: Remove parts from the replacement wear kit. Install new wear ring into wear ring groove. Install new impeller into impeller well. Place 15 cleaning beads into the sensor end cover (Figure 2). Beads must only be present in the electrode compartment. Align temperature sensor and impeller with respective holes in sensor cover. Lower sensor into sensor cover. Twist the cover gently until the sensor cover guide pins drop into the sensor end. Holding the sensor cover in place, insert, and tighten 2x cover screws until there is no gap between the sensor cover gasket and the sensor end. To prevent motor binding, do not over-tighten.

To function test sensor: Power on the sensor and verify that the impeller spins freely. If the impeller does not spin freely, loosen the cover screws ¼ turn at a time until the impeller can be heard spinning. The sensor can also be run in a bucket with water to verify the water stream from the outlet port.

Copyright © 2023-2024 Halogen Systems, Inc. All rights reserved worldwide.

Replacing and calibrating the pH Sensor

This procedure outlines the removal and replacement of pH reference electrode for Halogen Systems Chlorine Analyzers that possess pH. PH probes utilize a glass membrane and should be handled with care during assembly to prevent damage.

Materials Required:

1. Philips #1 Screwdriver
2. pH Removal Tool (included)
3. pH 7 Buffer
4. pH 10 Buffer
5. Deionized water (tap water OK)

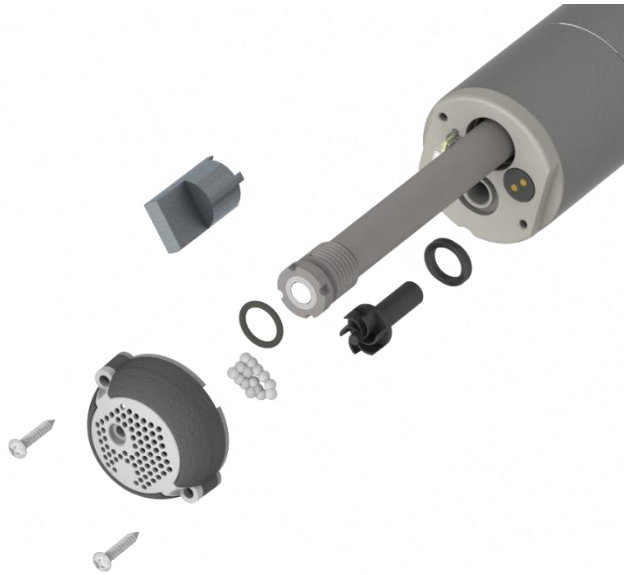

Instructions:

Removal

1. Turn off power to sensor and remove from process.
2. Remove sensor cover screws using Phillips screwdriver.
    a. IMPORTANT: Hold sensor cover in place to prevent cleaning balls from spilling.
3. Rotate sensor vertically to prevent cleaning ball release.
4. Remove sensor cover and set aside.
5. Use pH tool to remove pH electrode.

Installation

1. Remove protective caps from replacement electrode and clean with tap water to remove storage solution.
2. Verify presence of O-ring.
3. Insert pH electrode into sensor end by hand.
4. Tighten with pH Removal Tool until glass membrane is flush with sensor end. NOTE: Avoid tool contact with glass membrane.
5. Verify all cleaning balls (15) are in sensor cover impeller cavity.
6. Reinstall sensor cover by tightening cover screws until gasket is lightly compressed.
7. Return power to sensor to verify unimpeded impeller operation.
    a. If impeller is binding and sensor is unable to prime, loosen cover screws ¼ turn at a time until normal operation resumes.

Calibration

1. Place sensor into pH 7 buffer and power on.
2. Swirl sensor until buffer can be seen coming from ejection port.
3. Allow at least 2 minutes for sensor to equilibrate.
4. Initiate 7 buffer calibration via Display Module, PLC, or MP5 connect program.
5. After calibration is successful, rinse the sensor with tap water.
6. Place sensor in 10 buffer.
7. Swirl sensor until buffer can be seen coming from ejection port.
8. Allow at least 2 minutes for sensor to equilibrate.
9. Initiate 10 buffer calibration via Display Module, PLC, or MP5 connect program.
10. After successful calibration, return sensor to process.

Copyright © 2023-2024 Halogen Systems, Inc. All rights reserved worldwide.

Flow Cell Maintenance

Proper maintenance of the flow cell ensures optimal performance and longevity of your Chlorine Analyzer. Follow these guidelines for effective flow cell maintenance:

4. **Cleaning:**
   - The flow cell is transparent, allowing for easy inspection of the sensor condition without interrupting operations.
   - Clean the flow cell by wiping it down or washing it with detergents or diluted acids.

Important: Do not use solvents for cleaning, as they may cause the acrylic to craze or crack.

5. **O-Ring Maintenance:**
   - Inspect the O-ring annually. Replace it if it appears worn or stiff.
   - For O-ring replacements, a set of O-rings can be ordered with the following part number
     - OKIT-0001: 2x O-Rings; NSF-61 and ASTM D-6284 (Hot Monochloramine) rated
6. **Tubing Replacement:**
   - Replace the tubing at least once a year.
   - Immediately replace any tubing that is brittle, cracked, or leaking.
   - Replace old, discolored, fouled, or damaged tubing with new tubing of the same diameter to maintain proper functionality.

By adhering to these maintenance practices, you can ensure the reliable and efficient operation of your Chlorine Analyzer's flow cell.

5 YEAR MAINTENANCE REBUILD

It is recommended to have the factory perform a comprehensive 5-year rebuild of the sensor. This rebuild includes replacing the motor assembly and any worn parts, ensuring the sensor's continued accuracy and reliability.

Copyright © 2023-2024 Halogen Systems, Inc. All rights reserved worldwide.

SD Card Access

The SD card can provide invaluable information to our technical support team regarding the status of the Halogen sensor when errors or faults occur. The D20 logs each sensor measurement into the SD card. The information within the SD card can only be accessed by physically removing the SD card from the D20 and sharing the stored Logfile via a PC or laptop equipped with an SD card reader.

Warning: Do not power the D20 while accessing the inside of the unit.

Instructions:

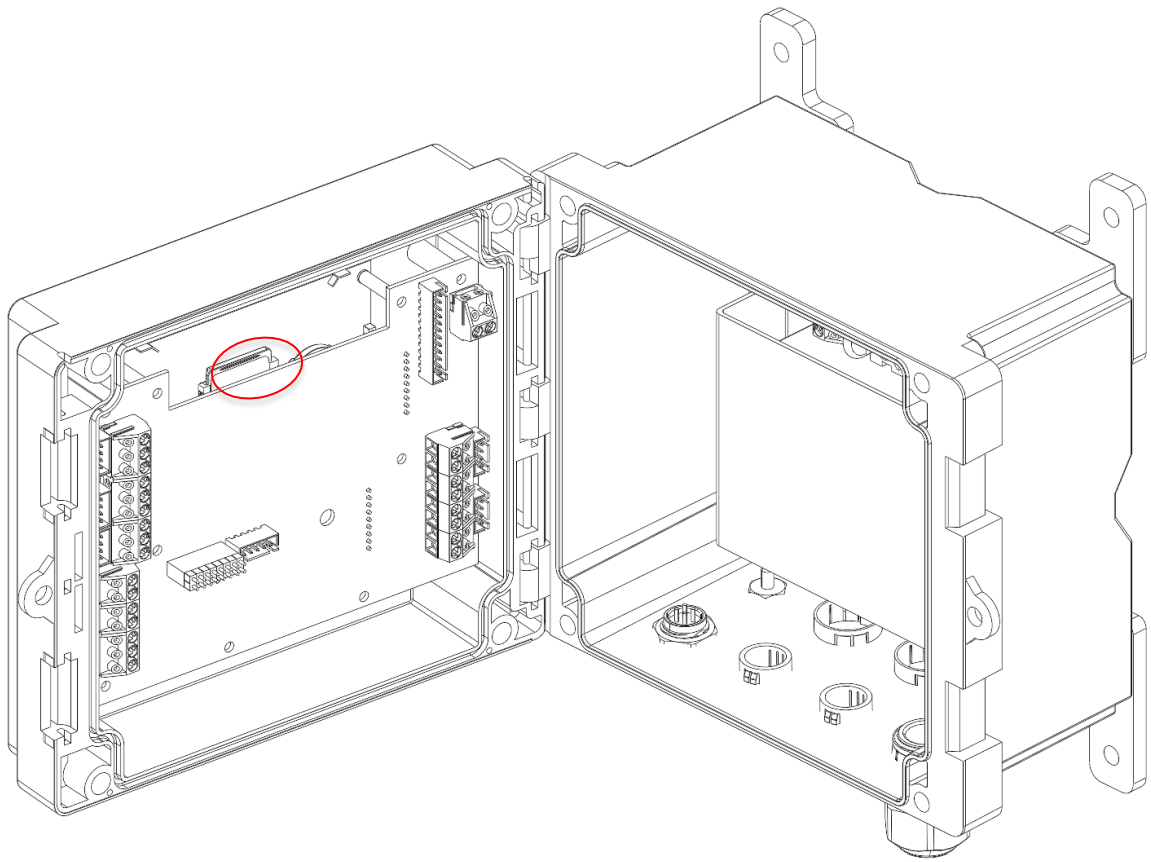

Removal

1. Unfasten the four cover screws on the D20 faceplate.
2. Open the D20 to access the Display PCB found inside the lid.
3. Locate the SD card housed in the SD card holder as shown above.
4. Gently press down on the SD card before pulling it out of the D20.
5. Attach the SD card into a device that has an SD card reader.

Installation

1. With the SD card label facing away from the operator during installation, seat the SD card into the SD card holder.
2. Secure the SD card by pressing it down into the SD card holder.
3. Close the D20 and reattach the cover screws before powering on the unit.

Copyright © 2023-2024 Halogen Systems, Inc. All rights reserved worldwide.

Note: If installed correctly, only the top 1/3" of the SD card will be exposed.

Firmware Updates:

The D20 or sensor firmware may be updated via the SD card provided. To update firmware, do the following:

1. Refer to the SD Card "Removal" procedure to remove the SD Card from the D20.
2. Install the SD Card into your PC.
3. Copy the supplied firmware onto the SD Card.
4. Refer to the SD Card "Installation" procedure to reinstall the SD Card into the D20.
5. Allow the D20 to start up.
6. Navigate to the Firmware Update Screen to update the D20.
   a. **[Menu] -> Maintenance -> Firmware Update -> Display**
      i. **All Display firmware will start with "F-GDisp"**
   b. **[Menu] -> Maintenance -> Firmware Update -> Sensor**
      i. **All Sensor firmware will start with "DsPc733"**
7. Validate the Code Version for the D20 is correct by navigating the Diagnostics Screen ([Home] -> [Down Arrow]). The code version is at the bottom of the Diagnostics Screen.

Battery Replacement

The battery powers the real-time clock circuitry while the D20 is not powered. Having a working battery allows Halogen's Technical Support team to diagnose potential sensor issues since logged data will be accurately timestamped. When the D20's system time resets after a power cycle, the battery needs to be replaced.

Warning: Do not power the D20 while accessing the inside of the unit.

Instructions:

Installation:

1. Unfasten the four cover screws on the D20 faceplate.
2. Open the D20 to access the Display PCB found inside the lid.
3. Locate the coin battery housed in the coin battery holder as shown above.
4. Hook your finger at the bottom of the coin battery holder and pull up to expose the coin battery.
5. Pinch and pull on the portion of the coin battery that is exposed.

Removal:

Copyright © 2023-2024 Halogen Systems, Inc. All rights reserved worldwide.

1. Orient the coin battery so that the "+" is **facing away** from the operator.
2. Set the coin battery into the coin battery holder.
3. Push down on the coin battery until it is fully secured.
4. Close the D20 and reattach the cover screws before powering on the unit.

Troubleshooting/FAQ

TROUBLESHOOTING

Troubleshooting Steps

Step 1: Check Physical Connections
Step 2: Verify Power Supply
Step 3: Check Settings
Step 4: Monitor Data Output
Step 5: Conduct Function Test
Step 6: Isolate the Specific Issue

'Sensor Not Found'

Symptoms

- **`'Sensor Not Found'`** Error on display screen

Corrective Action

7. Check Connections:
    - Inspect the connection and wiring to the Sensor Module for any loose or swapped connections.
2. Power Cycle:
    - After correcting any wiring issues, power the display off and then back on.
3. Verify Sensor Operation:
    - Check if the sensor motor is working.
    - If the motor is not working, check if the power and ground lines are wired backward. Correct the wiring if necessary.
4. Check for Shorts:
    - There could be a short in the wiring to the sensor. Use an ohm meter to check for continuity.
    - Test Resistance:
    - Check the resistance of all four wires to ground (sensor housing) using an ohm meter.
    - There could be an internal short from the wires to the sensor, especially if a valve adapter was added. Resistance should be open (infinite resistance).
    - If the motor is working but communication lines are still not functioning, the com lines may be reversed. Check and correct.
5. Sensor Replacement:
    - If the sensor still does not communicate after following these steps, replace it with a new sensor.

Copyright © 2023-2024 Halogen Systems, Inc. All rights reserved worldwide.

Reference Measurement Inaccuracy

Symptoms

- Inaccurate Chlorine or Monochloramine due to incorrect pH, Conductivity, or Temperature reporting.
- Inaccurate pH, Conductivity, or Temperature reporting

Corrective Action

- See Reference Calibration Section

Chlorine Measurement Inaccuracy

Symptoms

- Inaccurate Chlorine or Monochloramine measurements
- Erratic Chlorine or Monochloramine measurement

Corrective Action

- Complete Function Test to verify adequate sample flow.
- See Chlorine Calibration section.

Inadequate Sampling and Air

Symptoms

- Persistent Error 31
- Continuous 0 ppm reporting during ballasting
- Erratic TRO measurement

Corrective Action

- Perform power cycle or send clear errors command.
- Increase water flow to sensor.
- Perform Function Test.

Mechanical Operation

Symptoms

- Loud motor sound
- 0 ppm reporting during ballasting
- Error 33/35 presence

Corrective Action

- Function Test.
- Adjust sensor cover tightness.
- Replace Wear Parts.

COMMON FIELD REPAIRABLE ISSUES	8. Impeller Binding – Overtightening of Cover Screws 9. pH Measurement Deviation 10. Erroneous Calibration 11. “Error Sensor Not Found”

Copyright © 2023-2024 Halogen Systems, Inc. All rights reserved worldwide.

FREQUENTLY ASKED QUESTIONS

Issue (or what if this happens)	Answer
How can I check if any fuses have blown in the D20?	With the D20 cover opened, remove the four screws from the high-voltage shield (1), remove the shield exposing the underlying PCB (2), and replace any blown fuses (3). Use part number: 5x20mm Slow Blow 3.5A.

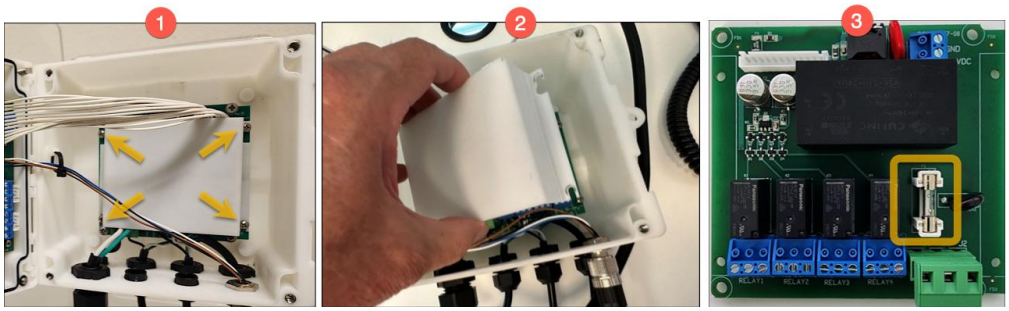

Why is my sensor not communicating via 4 – 20 mA output?	Confirm correct 4 – 20 output is being used. Set 4-20 mA maximum and minimum to scale to PLC.
Why is the sensor not communicating over Modbus?	Confirm wiring. Verify Baud and Parity settings of sensor match master unit. Default for the sensor are 19200 Baud | No Parity
Why is chlorine periodically dropping to 0 ppm via 4 – 20 mA?	Level 1 error codes result in 4-20 mA output going negative (3.8 mA). Error 31 (Air in Sensor) is the most common cause. Confirm sensor orientation and power cycle.
Why is my Chlorine Measurement Erratic?	Air bubbles often cause erratic chlorine measurement. Erratic measurement can also be caused by a defective pH probe or chlorine region switch. See Ballasting Calibration section for more information.
Why is my sensor always reading 0 ppm?	Are there any error codes present? Perform function test to verify motor function. Check sensor settings and reset calibrations to factory defaults. Contact Halogen Support.
Why is Chlorine Reading Low or 0 ppm?	Low chlorine measurement can be caused by inadequate sensor sampling. Confirm sensor orientation, flow to sensor, and motor operation. Perform function test. Restore to factory defaults. Contact Halogen Support.
Why is Chlorine Reading High?	A field calibration to an inaccurate reference can cause high measurements. Confirm flow to sensor. Restore factory default calibrations or recalibrate sensor.
How do I change the sensor Modbus address?	Use the Modbus Menu within the display transmitter or Halogen Software. See the 'Changing Modbus Address' instruction in the Halogen Software Guide.
How do I fix inaccurate pH measurements?	Calibrate or replace the pH electrode. pH measurement can also be turned off if calibration or replacement is not available.

Contact Halogen support if you have any questions (tech@halogensys.com). We're here to help!

Copyright © 2023-2024 Halogen Systems, Inc. All rights reserved worldwide.

Appendix A: D20 Technical Specifications

Overall*	
Description	Microprocessor-controlled, menu-driven controller that communicates with the sensor
Dimensions	6.3" H x 6.3" W x 4" D (160 x 160 x 101.6 mm)
Weight	3 lbs (display)
Display technology	3.5" TFT
Enclosure rating	IEC/EN 60529–IP 65, NEMA 250 type 4X, plastic enclosure
Installation category	Category II
Compliance certifications	CE, ETL certified to UL and CSA safety standards (with all sensor types), FCC, EU, UKCA
Warranty	12 months

Environmental*	
Operating temperature	-20 to 60°C (-4 to 140°F) (8W (AC)/9W (DC) sensor load) -20 to 45°C (-4 to 113°F) (28W (AC)/20W (DC) sensor load) Linear derating between 45 and 60°C (-1.33 W/°C)
Storage conditions	-20 to 70°C (-4 to 158°F), 0 to 95% relative humidity, non-condensing
Pollution degree	4
Temperature	Minimum: -40°F (40°C) Maximum: 167°F (75°C)

Power, data storage, and connectivity*	
Power requirements	85 to 240VAC ±10%, 50/60Hz; 1 A (28W sensor load)
Protection class	I, connected to protective Earth
Measurement interfaces	Two MP5 Modbus connectors
Relays	Three relays (SPDT) Wire gauge: 0.75 to 1.5 mm² (18 to 16AWG) Maximum switching voltage: 100 - 240VAC Maximum switching current: 5A Resistive/1A pilot duty maximum switching power: 1200VA resistive/360VA pilot duty
Communication	Analog: Four 0-20mA (or 4-20mA) analog outputs Digital: Modbus RTU standard
SD card	Used for data upload, software download, capable of est. 1M data points/sensor
Real-time clock	Battery, estimated to last 5 years

* Subject to change without notice

Copyright © 2023-2024 Halogen Systems, Inc. All rights reserved worldwide.

Appendix B: MP-Total Technical Specifications

Overall*	
Measurement method	Reagentless, three electrodes, no membrane or electrolyte
Free Chlorine measurement range - Limit of detection (LOD) - Limit of quantitation (LOQ) - Monochloramine	0 to 10 Free Chlorine ppm 0.03 TBD 0 to 5 ppm
Resolution	0.001 ppm (1 ppb)
Accuracy Free Chlorine 0 to 1 ppm Free Chlorine 1.01 to 10 ppm Monochloramine at 25°C Total Chlorine	 ±7% or ±0.02 ppm, whichever is greater ±15% or ±0.02 ppm, whichever is greater ±10% or ±0.02 ppm, whichever is greater ±15% or ±0.02 ppm, whichever is greater ±10% under flow changes from 0 to 4 meters/second velocity
Turbidity in sample without impact	No effect up to 3000 ppm (Arizona test dust fine, 50-micron size)
Calibration stability	6 months (typ)
Measurement interval	120 seconds
pH range (chlorine)	7.5 to 9.0
Conductivity	150 to 2,000 µS
Pressure limit	10 bar (145 psi)
Temperature	5 to 55°C
Sample compensation	Automatic
Factory calibration performed	Yes
Power consumption	24VDC ±10% at 50mA 200 mA startup maximum
Data transfer	Through controller or PLC

Ambient data*	
Storage temperature	-20 to 60°C (-4 to 140°F)
Operating temperature	0 to 55°C (41 to 135°F)
Maximum flow velocity	0 to 4 meters/sec velocity
Maximum sensor immersion depth/pressure	30' or greater, 140 psi
Cleaning method	Continuous, mechanical and electrochemical cleaning
Cable length	5' standard (up to 100')
Cable connection	M12 4-pin
Certifications	CE-compliant for conducted and radiated emissions: - CISPOR 11 (Class A limits) Limit of detection (LOD) - EMC immunity EN 61326-1 (industrial limits) - NSF61/372 Certified (by ALS Labs)
Sensor dimensions	1.75" x 12" (45 mm x 305 mm)

Copyright © 2023-2024 Halogen Systems, Inc. All rights reserved worldwide.

Weight	400 grams
Warranty	12 months

Appendix C: MP5A Technical Specifications

Overall*	
Measurement method	Reagent less, three electrodes, no membrane or electrolyte
Chlorine measurement range - Limit of detection (LOD) - Limit of quantitation (LOQ)	0 to 20 ppm 30 ppb (0.03 ppm) 40 ppb (0.04 ppm)
Resolution	0.001 ppm (1 ppb)
Chlorine accuracy [1]	±5% of the calibrated value1 (DPD) at any pH between 6.5 and 8.75 ±5% of the calibrated value1 (DPD) at any temperature between 15° and 35°C ±4% of the calibrated value1 (DPD) at any conductivity between 200 and 10,000 µS ±10% underflow changes from 0 to 4 meters/second velocity
Calibration stability	6 months (typical)
Measurement interval	60 seconds
pH range (chlorine)	6.5 to 9.0
Conductivity	50 to 10000 µS
Pressure limit	10 bar (145 psi)
Temperature	1 to 55°C
Sample Compensation	Automatic
Factory calibration performed	Yes
Power consumption	24VDC ±10% at 50mA 200 mA startup maximum
Data transfer	Through controller or PLC
Ambient data*	
Storage temperature	-20 to 60°C (-4 to 140°F)
- Operating temperature	1 to 55°C (33 to 131°F)
Maximum flow velocity	0 to 4 meters/sec velocity
Cleaning method	Continuous mechanical cleaning, electrochemical cleaning
Certifications	CE-compliant for conducted and radiated emissions: - CISPOR 11 (Class A limits) Limit of detection (LOD) - EMC immunity EN 61326-1 (industrial limits) NSF61/372 Certified (by ALS Labs)

Copyright © 2023-2024 Halogen Systems, Inc. All rights reserved worldwide.

Appendix D: Sensors and Accessories

Sensor PN[1]	Application	Accessory PN[1]	Description	Notes	Cable lengths	Sensor connection
D-LF	Drinking water	FC-01	Side stream flow cell kit low flange	Side stream	5' (up to 75')	M12-4
W-LF	Wastewater					
T-LF						
D-MF	Drinking water	PT-01	Direct in pipe: 2" PCV socket tee with sensor mount adapter, medium flange	Direct in pipe	5' (up to 75')	M12-4
W-MF	Wastewater					
D-MF	Drinking water	MA-2	Direct in pipe: 2" Threaded sensor mount adapter, medium flange	Use with metal pipe	5' (up to 75')	M12-4
W-MF	Wastewater					
D-NF	Drinking water	WT-01	Wet tap with remover assembly and isolation chamber	Use with corp stop valve and saddle, appropriates for size and material	5' (up to 75')	M12-4
D-LF	Drinking water	IM-01	Immersion sensor with 1" 45° adapter or 1" pipe boom mount	Pipe and boom mount (not included)	5' (up to 75')	M12-4
W-LF	Wastewater					

[1] Part number

Appendix E: D20 Control and Relay Operation

Base	Input power cable	Com PCB	Output connector 1 sensor 1	Output connector 2 sensor 2
24VDC FC	None	North America	M12-4 sensor	None
24VDC FC	None	North America	M12-4 sensor	None
24VDC FC	18 SWG cable	None	M12-4 sensor	None

Copyright © 2023-2024 Halogen Systems, Inc. All rights reserved worldwide.

E.1 Controller PCB Board

(Not Available for Low Voltage D20 Models)

Controller functionality is only available in high voltage models of the D20. The Controller PCB Board and controller relays can be identified by the following depiction shown below:

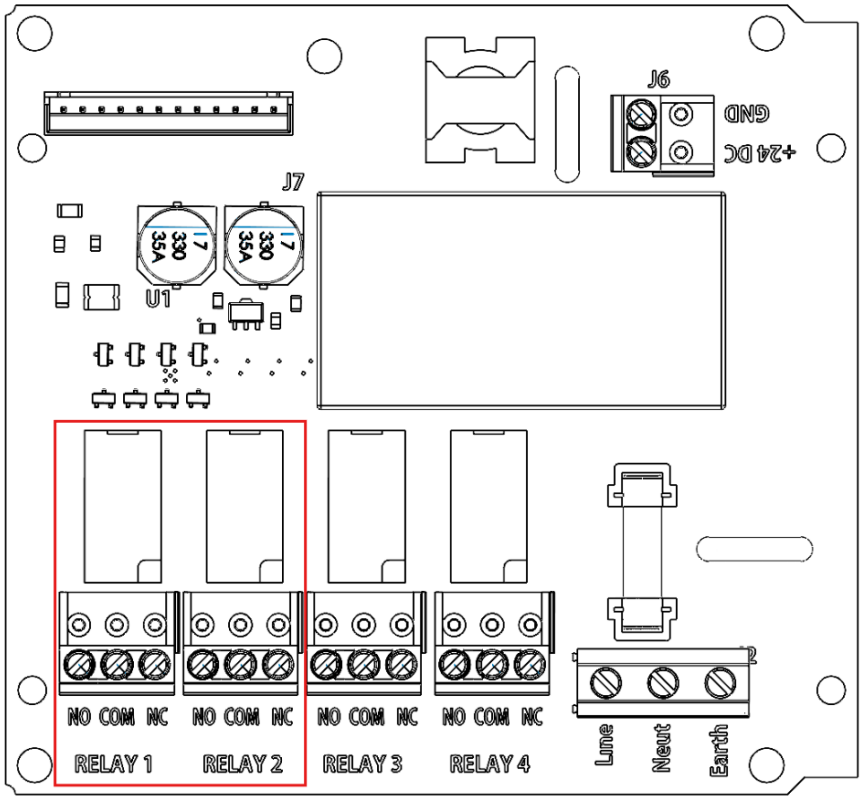

The Controller PCB Board can be used to control a pump or gate based on the following table:

Relay Number	Relay Application
Relay 1	Chlorine Control Relay
Relay 2	pH Adjustment Relay

Installation recommendations of a pump, Controller PCB Board wiring diagrams, and configuring controller settings will be presented in subsequent sections.

Copyright © 2023-2024 Halogen Systems, Inc. All rights reserved worldwide.

E.1.1 INSTALL EXTERNAL PUMP

Install an external pump in a pipe location that would precede the Halogen Sensor along the process pipe.

E.1.2 CONNECT PUMP(S) TO CONTROLLER

The Controller PCB Board uses measurements made by the Halogen Sensor to decide when to activate/energize the relay.

Set up Relay 1 and Relay 2 to activate the controller. To activate relay control, do the following:

1. Go to **'MENU'**
2. Select **'Controller'**
3. Select **'Relay Set Up'**
4. Choose **'Feed Chl (Relay 1)'**
5. Set to **'Yes'**

The user can alter the pH adjusting pump to either feed base or acid depending on the desired pH level of the process water. To set up the relay for pH control, do the following:

1. Go to **'MENU'**
2. Select **'Controller'**
3. Select **'Relay Set Up'**
4. Choose **'Feed Acid (Relay 2)'** or **'Feed Base (Relay 2)'**
5. Set to **'Yes'**

Note: Do not set Relay 2 to both 'Feed Acid' and 'Feed Base' to 'Yes'.

Normally Open (NO) Circuit - Pumps

Normally Open (NO): Terminal that is open (disconnected) when the relay is not activated/energized.

NO Terminals are normally used when the user needs the circuit to stay off by default and only turn on when the relay is activated/energized when a certain condition is met.

For example, if you have a chlorine pump that needs to stay off until a certain condition is met (e.g., chlorine is lower than the set chlorine range), connect it to the NO terminal.

Warning: Do not plug in the power cable to a power outlet yet!

Copyright © 2023-2024 Halogen Systems, Inc. All rights reserved worldwide.

E.1.2.3 Wiring Diagrams

The wiring illustrations shown below demonstrate how the user must connect a pump to the Controller PCB Board:

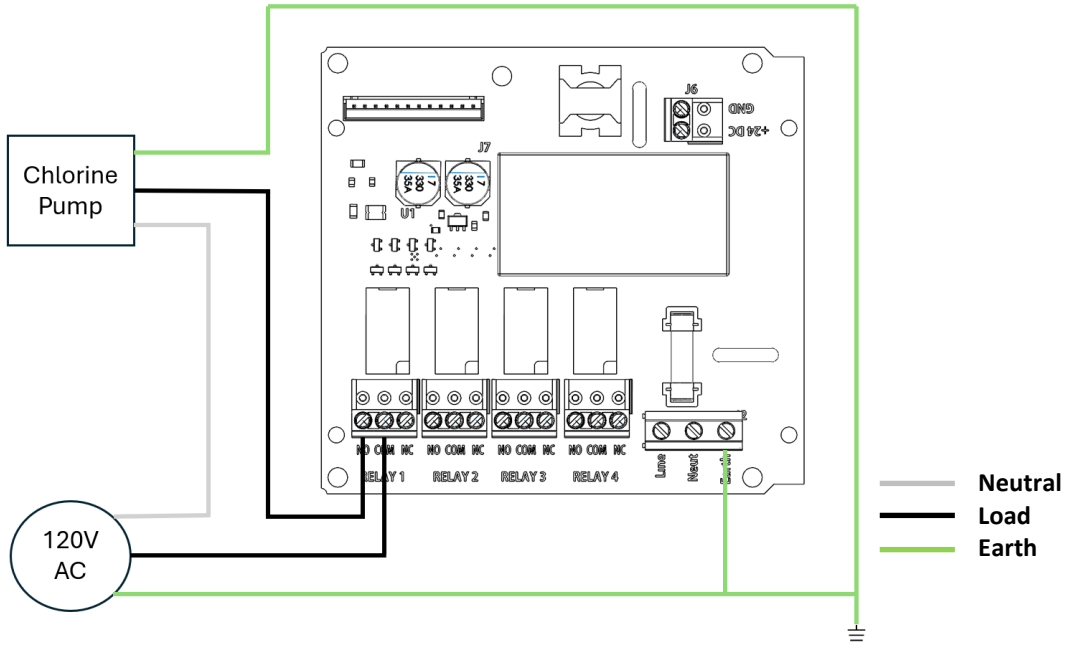

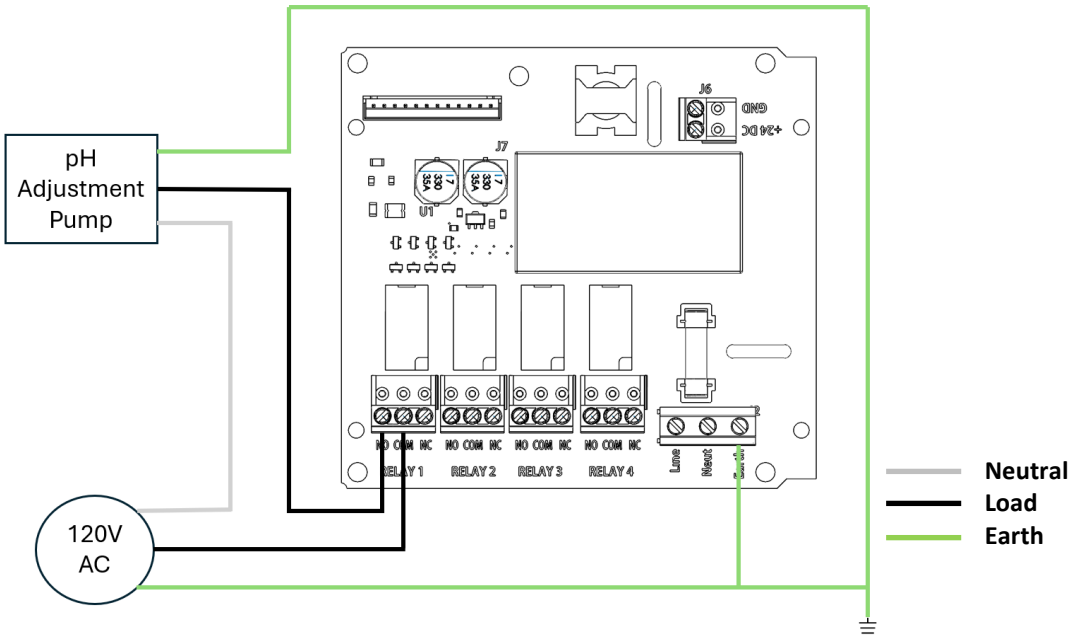

As shown above, all wires have been color coded and labeled. The Neutral and Earth wire may be spliced together. The Line wire from the 120VAC source must be connected to the common (COM) terminal in the relay. The Load wire from the pump must be connected to the NO terminal.

Copyright © 2023-2024 Halogen Systems, Inc. All rights reserved worldwide.

E.1.3 CONFIGURE CONTROL SETTINGS

To set the controller setpoints, navigate to the controller setpoints menu screen:

1. Go to **'MENU'**
    - Select **'Controller'**
    - Select **'Controller Set Points'**

E.1.3.1 Chlorine Setpoint

To calibrate the Chlorine Setpoint, first go to the Menu Screen and then use the UP and DOWN Arrow keys to underline "**CONTROLLER SETPOINTS**;" press SELECT. In the **CONTROLLER SETPOINTS** Screen, underline "**Sanitizer**" and press SELECT to allow editing. Use the UP and DOWN Arrows to adjust the value for, and then press SELECT to disable editing. The sanitizer button serves as a lower bound for the Chlorine. There is no way to set an upper bound on Chlorine.

E.1.3.2 pH Setpoint

To enter the pH Setpoint, first go to the Menu Screen and then use the UP and DOWN Arrow keys to underline "**CONTROLLER SETPOINTS**;" press SELECT. In the **CONTROLLER SETPOINTS** Screen, underline "**PH LOWER**" or "**PH UPPER**" and press SELECT to allow editing. Use the UP and DOWN Arrows to adjust the value for, and then press SELECT to disable editing.

E.1.3.3 Set dispense time

The dispense time may be set on the Controller Set Points submenu. **SANITIZING TIME** and **PH ADJUSTING** TIME control how long a solenoid or pump will be energized (in seconds). Maxium number of seconds is 254.

E.1.3.4 Cycles Until Feed

Dispense delay prevents the controller from activating chemical feed every measurement cycle. If the **Cycles Until Feed** setpoint has not been reached, when set to "2" it will activate the feed pump a maximum of every other cycle. Chlorine and pH chemicals will not be dispensed on the same cycle. If both setpoints are calling for chemicals, then the controller will alternate between pH and sanitizer.

E.1.3.6 Proportional Control Behavior

The Controller PCB Board only provides proportional control to the system since the controller is driven by a relay switch that is either activated or deactivated. Typically, systems with only a proportional control exhibit a smooth sawtooth signal.

Copyright © 2023-2024 Halogen Systems, Inc. All rights reserved worldwide.

E.1.4 Feeding Method: Cycle Dispensing Mode

Cycle dispensing mode allows the user to control both the pH and chlorine. Cycle dispensing mode will activate the reagent pump for the set **`Sanitizing Time`** and **`pH Adjusting Time`** only after the **`Cycles Until Feed`** condition is met:

`Menu | Controller | Controller Setpoints`

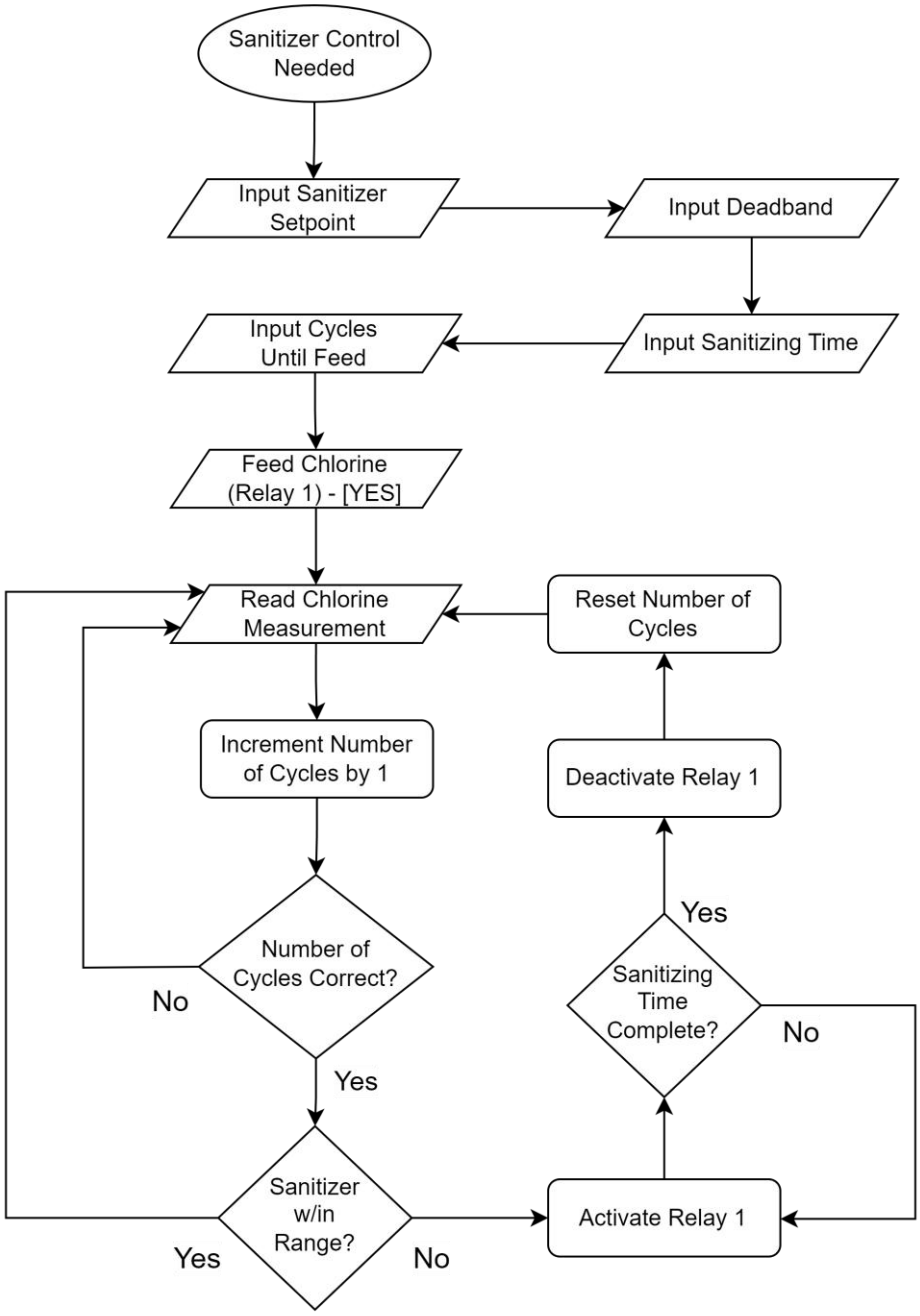

The diagram shown above visually demonstrates how to set up the sanitizer control and how the controller handles all the parameters the user inputs in Cycle Dispensing Mode.

Copyright © 2023-2024 Halogen Systems, Inc. All rights reserved worldwide.

Feeding Method: Continuous Dispensing Mode

Continuous dispensing mode only allows chlorine control. Continuous dispensing mode will activate the reagent pump continuously until the measured chlorine is within the acceptable chlorine range set by the **`Sanitizer`** setpoint and the **`Deadband.`**

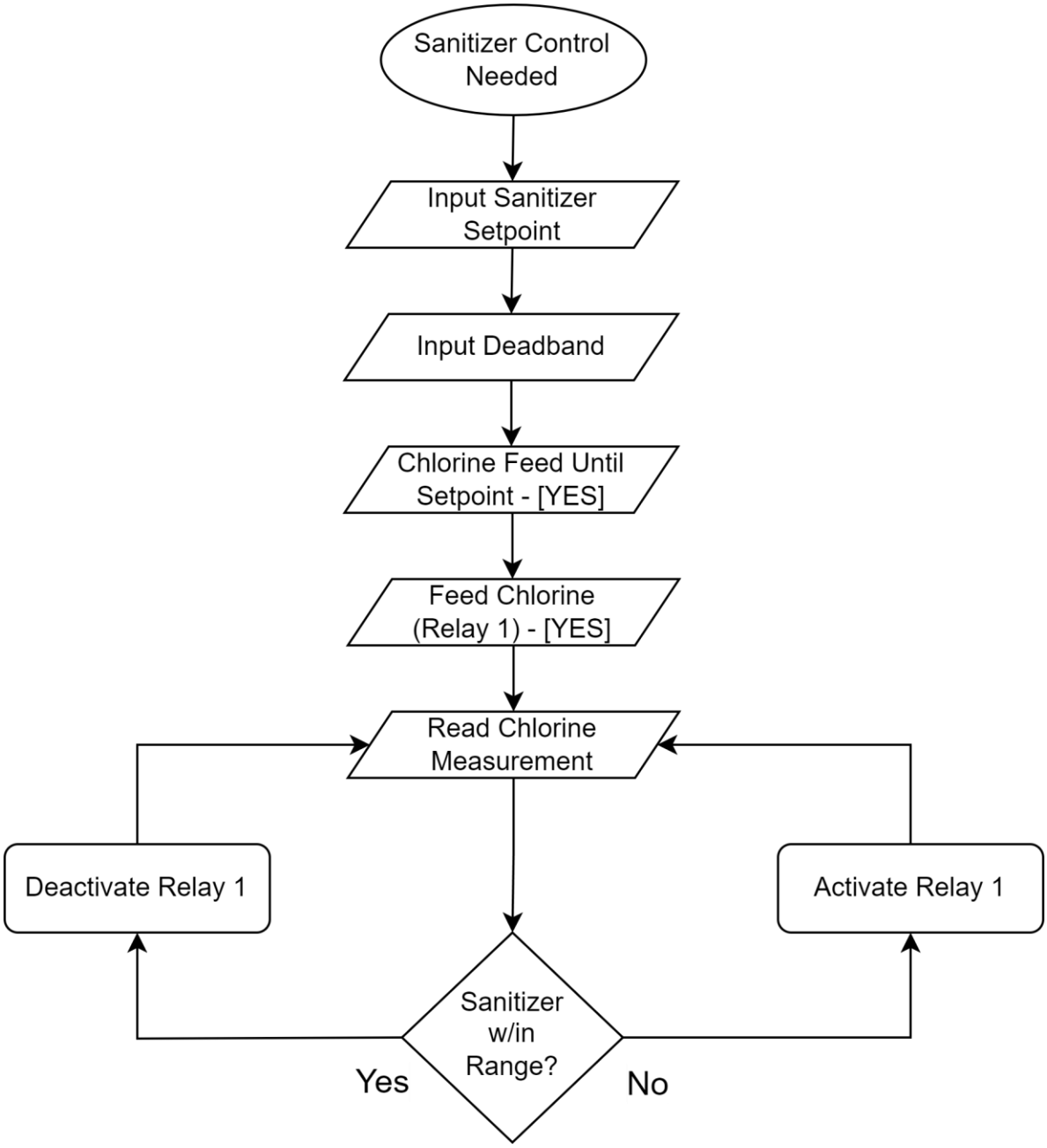

The diagram shown above visually demonstrates how to set up the sanitizer control and how the controller handles all the parameters the user inputs in Continuous Dispensing Mode.

Copyright © 2023-2024 Halogen Systems, Inc. All rights reserved worldwide.

E.2 Setting Up Alarms

On the Controller PCB Board, you may utilize Relay 3 and Relay 4 to power an alarm, the location of the alarm relays are shown below:

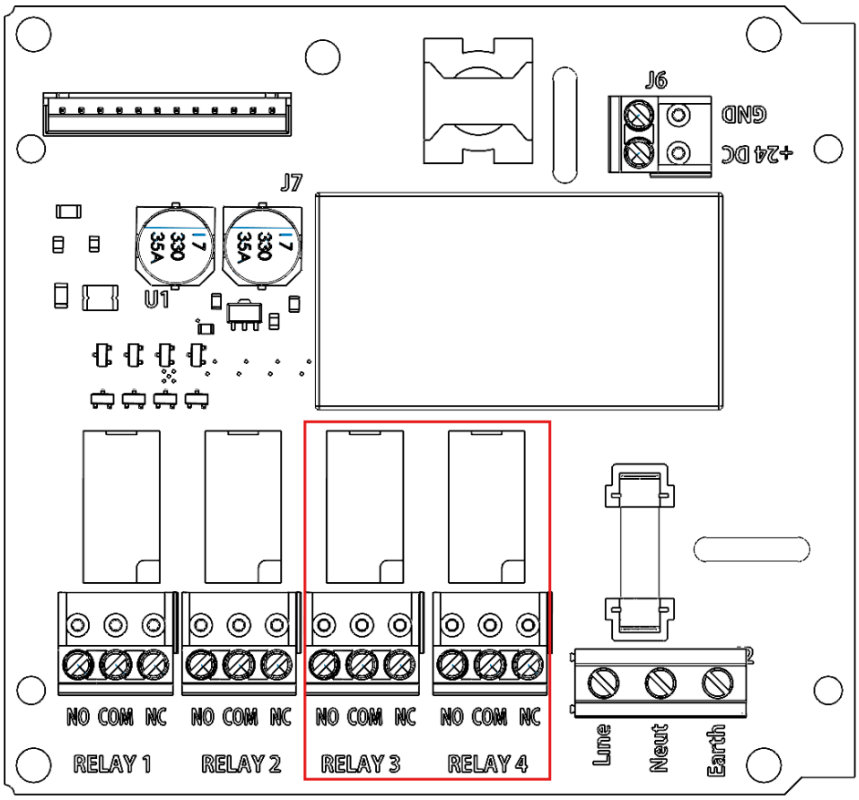

An alarm can be connected to warn the user if a selected parameter is critically low or critically high based on the following table:

Relay Number	Relay Application
Relay 3	Low Value Alarm
Relay 4	High Value Alarm

E.2.1 LOW VALUE ALARM

To set the value for the low value alarm, proceed to the following screen:

6. Go to **'MENU'**
7. Select **'Controller'**
8. Select **'Alarm'**
9. Choose **'Low Point'**
10. Enter Low Value for alarm

Once the selected parameter falls below the set low point, the low value alarm will be triggered.

Copyright © 2023-2024 Halogen Systems, Inc. All rights reserved worldwide.

E.2.2 HIGH VALUE ALARM

To set the value for the low value alarm, proceed to the following screen:

1. Go to **'MENU'**
2. Select **'Controller'**
3. Select **'Alarm'**
4. Choose **'High Point'**
5. Enter High Value for alarm

Once the selected parameter falls below the set high point, the high value alarm will be triggered.

E.2.3 WIRING DIAGRAM

E.3 Installation of a Flow Meter or Flow Switch

A flow sensor may be installed and configured in the D20 controller to trigger chlorine and acid feeds. A flow sensor ensures water flow when pumps add chemicals. Flow-dependent control can be set, according to the following:

1. Go to **'MENU'**
2. Select **'Controller'**
3. Select **'Options'**
4. Select **'Flow Needed for Relay On'**
5. Toggle to **'YES'**
6. Toggle between **'METER'** or **'SWITCH'**

E.3.1 D20 CONFIGURATION – FLOW METER OR FLOW SWITCH

Depending on the type of flow sensor used, a physical shunt on the D20's display PCB must be moved:

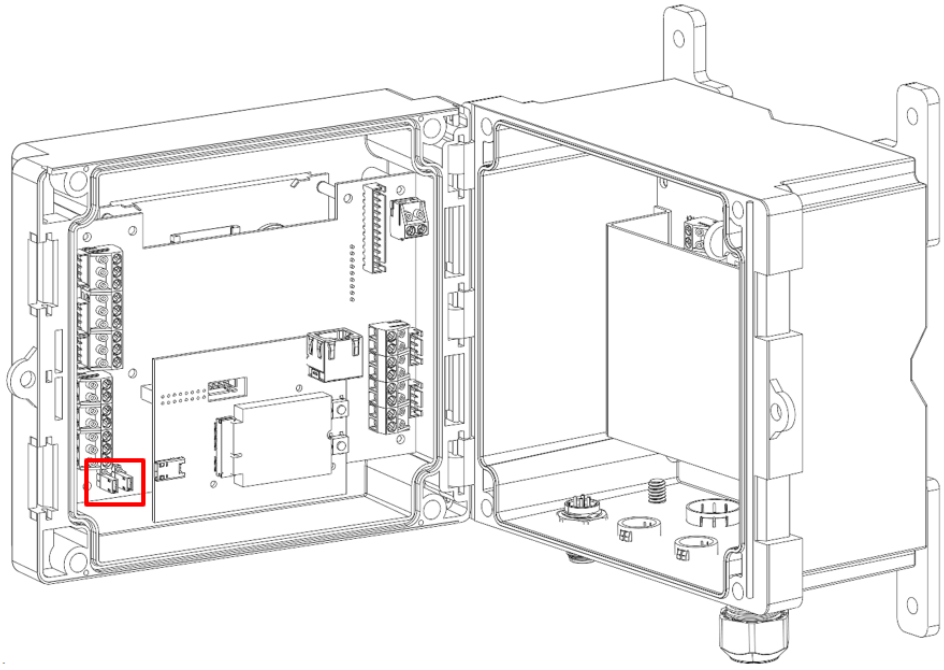

Copyright © 2023-2024 Halogen Systems, Inc. All rights reserved worldwide.

FLOW METER

To identify the shunt, the 3-pin male headers will be annotated “J15.” The shunt must connect the bottom two pins if a flow meter is being used for flow control:

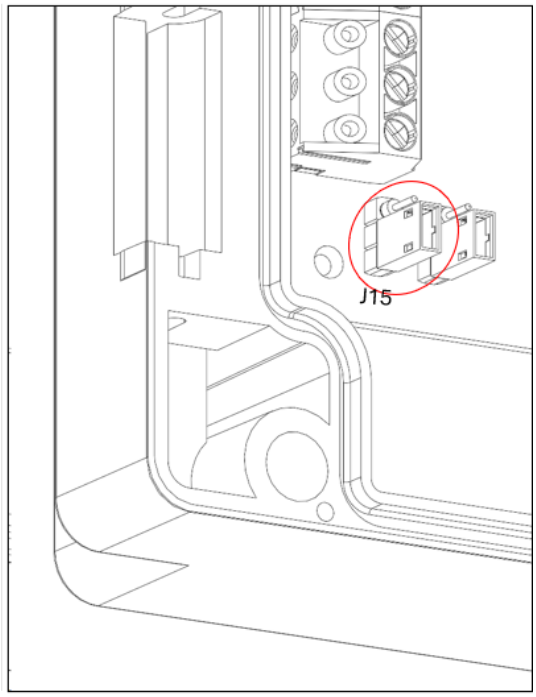

FLOW SWITCH

If a flow switch is connected for flow control, the shunt must connect the top two pins:

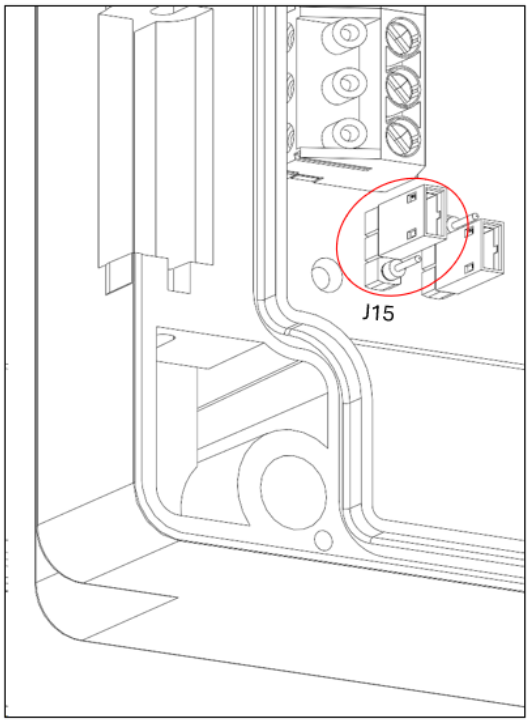

Copyright © 2023-2024 Halogen Systems, Inc. All rights reserved worldwide.

E.3.2 CONNECT THE SENSOR TO THE CONTROLLER

Use the following pinouts to connect sensors to the controller:

Pin	Input
7	Ground NC
6	Flow
5	+5VDC
4	Liquid
3	Ground
2	+5VDC
1	NC

The 7-pin terminal block J2 is used for the input from various sensors (ex: flow sensor/flow switch and optical liquid sensor). The flow sensor connects to pins 5, 6, and 7.

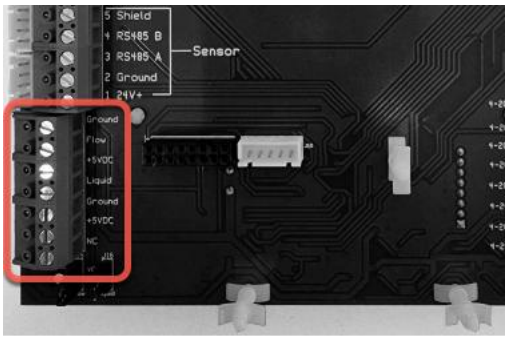

E.3.3 USING A FLOW SENSOR INTERLOCK

The system will not energize the chemical pumps if sufficient flow is absent. Enable **Flow Sensor Interlock** (disabled by default) on the controller. The D20 is designed to work with Gems™ Sensors RFO series flow meters as shown below. (Cables should be wired to block terminals OD and SR.)

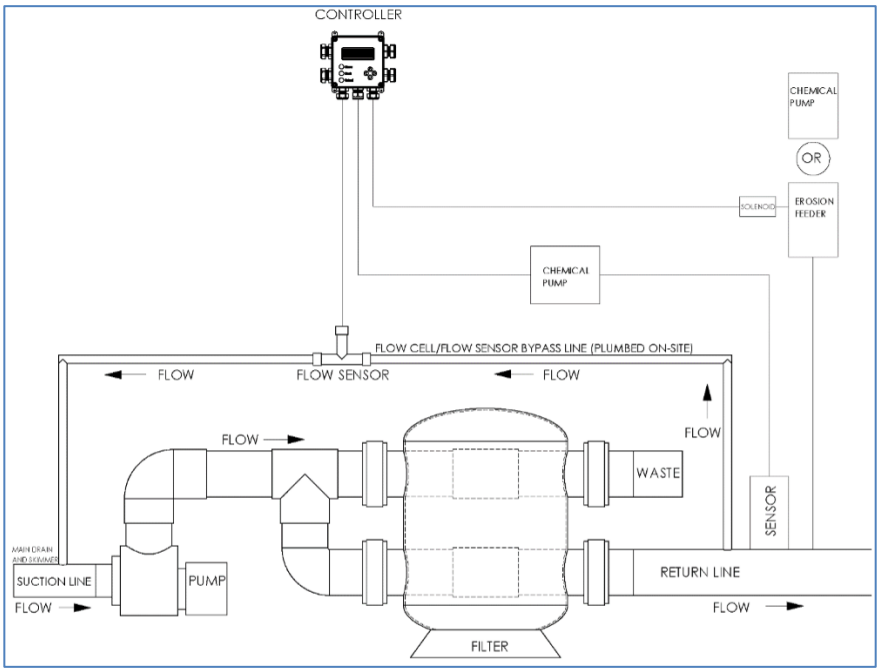

Copyright © 2023-2024 Halogen Systems, Inc. All rights reserved worldwide.

E.4 Controller Troubleshooting

1. Ensure that your pump is externally powered, refer to section E.1.2.3 for a wiring diagram.
2. Upon the D20's start-up, allow up to 5 cycles for the relays to trigger.
3. The pH adjusting relay (Relay 2) will be disabled when **`Chlorine Feed Until Setpoint`** is activated.
4. If your controller overshoots the desired chlorine concentration:
    a. Increase **`Cycles Until Feed`** to allow the system to adequately mix and report the changes to the Halogen Sensor before the controller attempts to dispense more reagent.
    b. Decrease **`Sanitizing Time`** to reduce the amount of the sanitizing reagent that is dispensed into the system.
5. Consider the priming time of a pump, if the priming time for the pump is longer than the prescribed **`Sanitizing Time`** or **`pH Adjusting Time`**, then no reagent will be dispensed.
6. Do not have Relay 2 to be activated to **`Feed Acid`** and **`Feed Base`**.
7. If **`Flow Needed for Relay On`** is activated, then if a flow sensor is not detected and providing feedback to the D20, the relays will not be activated.
8. If **`Chlorine Feed Until Setpoint`** is activated, if the chlorine concentration is not met withing 6 minutes, Relay 1 will deactivate and the **`Chlorine Feed Until Setpoint`** Setting will have to be turned off then on again.

Revision History

Revision	Release Date – MM/DD/YYYY	Change Notes
R1.00	06/12/2024	Initial Release
R1.01	06/20/2024	Free Chlorine Calibrations Added, additional notes were added in the "Zero Free Chlorine Calibration" section of "Calibrating Chlorine Measurement"
R1.02	06/21/2024	In "Operation Instructions" instructions to remove and install the SD card and coin battery have been added.
R1.03	08/27/2024	Monochloramine calibration instructions updated. Autodetection of pH buffer added. Cleaning and Maintenance sections refined. Flow Meter/Switch Instructions added. Firmware Update instructions added. Flow cell mounting revised to Backplate Mounting.
R1.04	08/30/2024	Menu screens updated to reflect MP6 operations. Quick Start Calibration guides implemented in the "Calibration Chlorine Measurement" section.
R1.05	05/14/2025	Added Total Chlorine Calibrations, "MP6" changed to "MP-Total"
R1.06	02/16/2025	The EXT traffic Enabled option has been removed and no longer exists.

Copyright © 2023-2024 Halogen Systems, Inc. All rights reserved worldwide.

Copyright © 2023-2024 Halogen Systems, Inc. All rights reserved worldwide.

Limited Warranty

Halogen Systems warrants its products to the original purchaser against any defects that are due to faulty material or workmanship for a period of one year from date of shipment unless otherwise noted in the product manual.

In the event that a defect is discovered during the warranty period, Halogen Systems agrees that, at its discretion, it will repair or replace the defective product or refund the purchase price excluding original shipping and handling charges. Any product repaired or replaced under this warranty will be warranted only for the remainder of the original product warranty period.

This warranty does not apply to consumable products such as chemical reagents; or consumable components of a product, such as, but not limited to, lamps and tubing.

Contact Halogen Systems or your distributor to initiate warranty support. Products may not be returned without authorization from Halogen Systems.

Limitations

This warranty does not cover:

- Damage caused by acts of God, natural disasters, labor unrest, acts of war (declared or undeclared), terrorism, civil strife, or acts of any governmental jurisdiction
- Damage caused by misuse, neglect, accident, or improper application or installation
- Damage caused by any repair or attempted repair not authorized by the Halogen Systems
- Any product not used in accordance with the instructions furnished by the Halogen Systems
- Freight charges to return merchandise to the Halogen Systems
- Freight charges on expedited or express shipment of warranted parts or products
- Travel fees associated with on-site warranty repair

This warranty contains the sole express warranty made by Halogen Systems in connection with its products. All implied warranties, including, without limitation, the warranties of merchantability and fitness for a particular purpose, are expressly disclaimed.

Some states within the United States do not allow the disclaimer of implied warranties, and if this is true in your state, the above limitation may not apply to you. This warranty gives you specific rights, and you may also have other rights that vary from state to state.

This warranty constitutes the final, complete, and exclusive statement of warranty terms, and no person is authorized to make any other warranties or representations on behalf of Halogen Systems.

Limitation of Remedies

The remedies of repair, replacement, or refund of the purchase price as stated above, are the exclusive remedies for the breach of this warranty. On the basis of strict liability or under any other legal theory, in no event shall Halogen Systems be liable for any incidental or consequential damages of any kind for breach of warranty or negligence.

Subject to all terms and conditions www.halogensys.com/information.

Copyright © 2023-2024 Halogen Systems, Inc. All rights reserved worldwide.

Index

24AWG cabling, 7
4-20mA wiring, 7
checklist, 13
Chlorine level, 11
colorimeter, 2
commissioning, 2
commissioning step, 2
compliance and certification, ii
connect to PLC, 12
D20
  connectors, 6
  installation, 5
  mounting to a pole, 6
  mounting to a wall, 5
  opening the cover, 7
  start-up, 10
display options, 44
flow cell
  installation, 9
flow sensor interlock, 54
Gems™ Sensors, 54
Halogen side stream sensor, 8
inspection step, 12
installation of the display/controller step, 2
installation step, 5
John Guest push-to-connect *(PTC) fittings*, 8
limited warranty (Halogen Systems), 56
loop powered, 7
mounting, 5
MP5
  installation, 52
  specification, 42
planning step, 2, 3
potable water line, 8
power, 3
precautionary labels, ii
safety information, ii
sensor connections, 54
sensors and accessories, 44
services at site, 3
technical support, i
trademarks and copyrights, ii
troubleshooting and FAQ, 39
warranty, 56
what you'll need, 4
what's included, 4

Copyright © 2023-2024 Halogen Systems, Inc. All rights reserved worldwide.